Huber
TEL. (+39) 0322 967783
MAIL. huber@huberitalia.com

Single lever sink mixer with pull out handspray KITCHEN_LL404570

MODEL **LL404570**

Single lever sink mixer with pull out handspray,swivel spout,150 cm Brass flexible hose

AVAILABLE FINISHINGS

21 21 Chrome

CHARACTERISTICS

Cartridge Spare Parts **ZZ93196000**

38 mm Cartridge

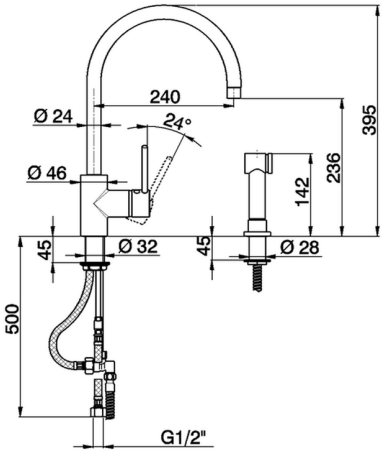

2026-04-30

© 2021 Huber. Via Brughiere, 50. 28017 - San Maurizio (NO) - Italy
Mail: huber@hubertitalia.com, Telefono: (+39) 0322 967783, P.Iva IT02422800033.