Huber
TEL. (+39) 0322 967783
MAIL. huber@huberitalia.com

# Cover Part for 2 Function Concealed Thermo Valve NUOVA EGO_NE01V200

MODEL **NE01V200**

Cover Part for 2 Function Concealed Thermo Valve,for item ZB01V200

## AVAILABLE FINISHINGS

**21** 21 Chrome

**2F** 2F Brushed Nickel

**40** 40 Matt Black

**4Q** 4Q Matt White

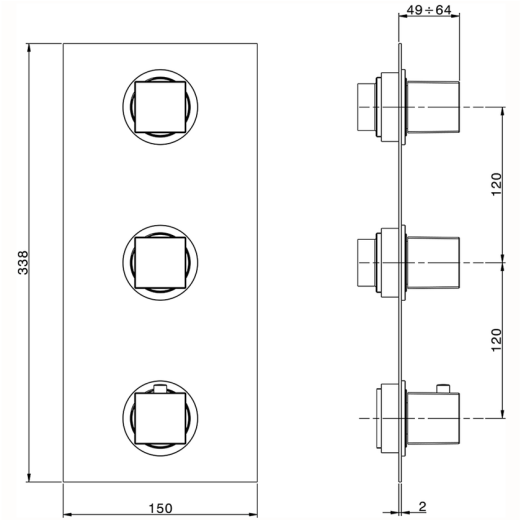


## CHARACTERISTICS

| | |
|---|---|
| Installation | **Concealed** |
| Required concealed parts | **ZB01V200** |

### Thermostatic

The Huber thermostatic is your personal water manager, helping you to handle, control and save water and energy.

© 2021 Huber. Via Brughiere, 50. 28017 - San Maurizio (NO) - Italy
Mail: huber@hubertitalia.com, Telefono: (+39) 0322 967783, P.Iva IT02422800033.

Huber
TEL. (+39) 0322 967783
MAIL. huber@huberitalia.com

# 2 Function Concealed Thermostatic Valve CONCEALED_ZB01V200

MODEL **ZB01V200**

2 Function Concealed Thermostatic Valve

## AVAILABLE FINISHINGS

**04** 04 Without finishing

## CHARACTERISTICS

| | |
|---|---|
| Installation | **Concealed** |
| Cartridge Spare Parts | **23.51A.HF** |
| **HF Thermostatic Valve** | |
| Concealed | **1** |

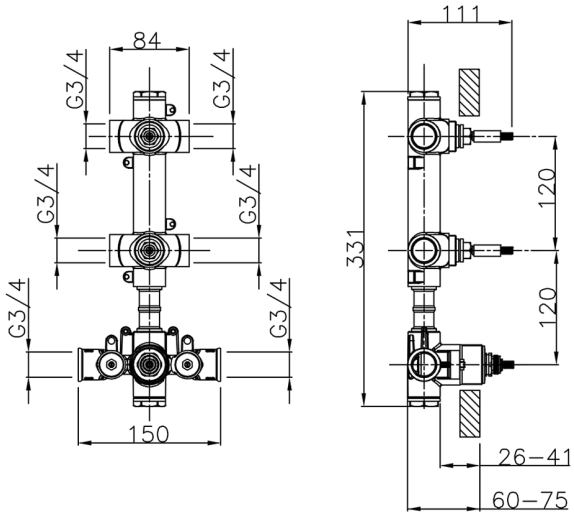


## Thermostatic

The Huber thermostatic is your personal water manager, helping you to handle, control and save water and energy.

2024-11-21

© 2021 Huber. Via Brughiere, 50. 28017 - San Maurizio (NO) - Italy
Mail: huber@hubertitalia.com, Telefono: (+39) 0322 967783, P.Iva IT02422800033.