Huber
TEL. (+39) 0322 967783
MAIL. huber@huberitalia.com

Single lever bidet mixer VICTORIAN_VM000550

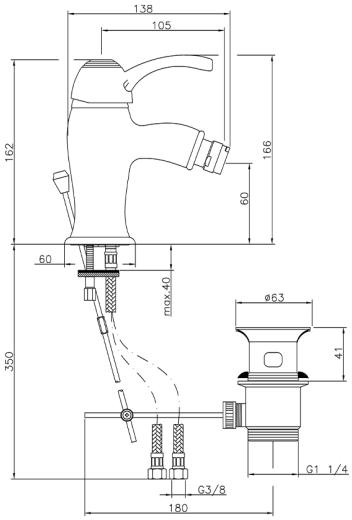

MODEL **VM000550**

Single lever bidet mixer,with 1"1/4 automatic pop up waste,G.3/8" stainless steel flexible hoses

AVAILABLE FINISHINGS

21 21 Chrome

27 27 Old Bronze

2A 2A Satin Brushed Nickel

2G 2G Antique Gold

2W 2W Brushed Gold

CHARACTERISTICS

Cartridge Spare Parts **ZZ95273000**

40 mm Cartridge

2026-06-27

© 2021 Huber. Via Brughiere, 50. 28017 - San Maurizio (NO) - Italy
Mail: huber@hubertitalia.com, Telefono: (+39) 0322 967783, P.Iva IT02422800033.