Huber
TEL. (+39) 0322 967783
MAIL. huber@huberitalia.com

Concealed 4-hole bath/shower valve SUITE_SU000210

MODEL **SU000210**

Concealed 4-hole bath/shower valve,with 3 outlet diverter,without waste

AVAILABLE FINISHINGS

21 21 Chrome

40 40 Matt Black

2F 2F Brushed Nickel

2W 2W Brushed Gold

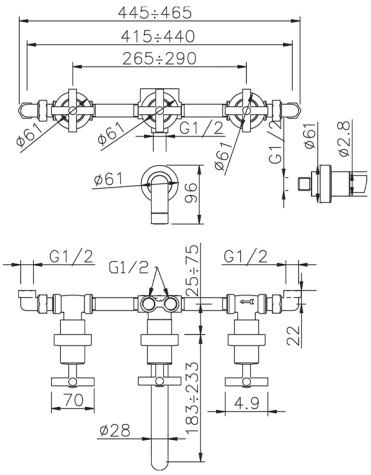

CHARACTERISTICS

Installation	**Concealed**

2024-12-18

© 2021 Huber. Via Brughiere, 50. 28017 - San Maurizio (NO) - Italy
Mail: huber@hubertitalia.com, Telefono: (+39) 0322 967783, P.Iva IT02422800033.