Huber
TEL. (+39) 0322 967783
MAIL. huber@huberitalia.com

2-function single lever shower set COLUMNS_QT0R4032

MODEL **QT0R4032**

2-function single lever shower set,2-outlet deviastop,adjustable riser column,sliding shower bracket,42x18 mm ABS Quad one spray handshower,300x300 mm INOX square showerhead 2 mm thick,150 cm smooth SILVERFLEX Flexible Hose

AVAILABLE FINISHINGS

21 21 Chrome

40 40 Matt Black

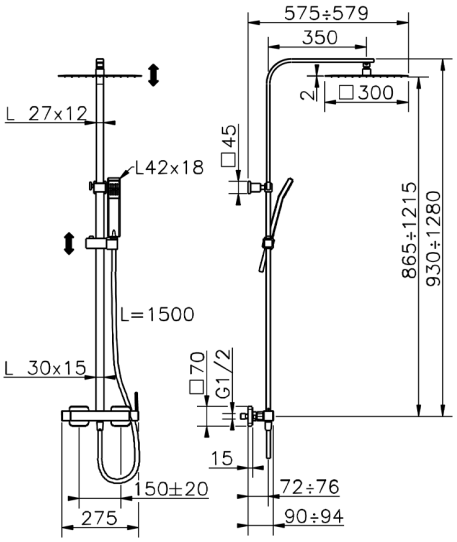

CHARACTERISTICS

Cartridge Spare Parts **ZZ94240000**

25 mm Cartridge

2026-04-29

© 2021 Huber. Via Brughiere, 50. 28017 - San Maurizio (NO) - Italy
Mail: huber@hubertitalia.com, Telefono: (+39) 0322 967783, P.Iva IT02422800033.