Concealed thermostatic shower mixer NUOVA EGO_NE0KT010

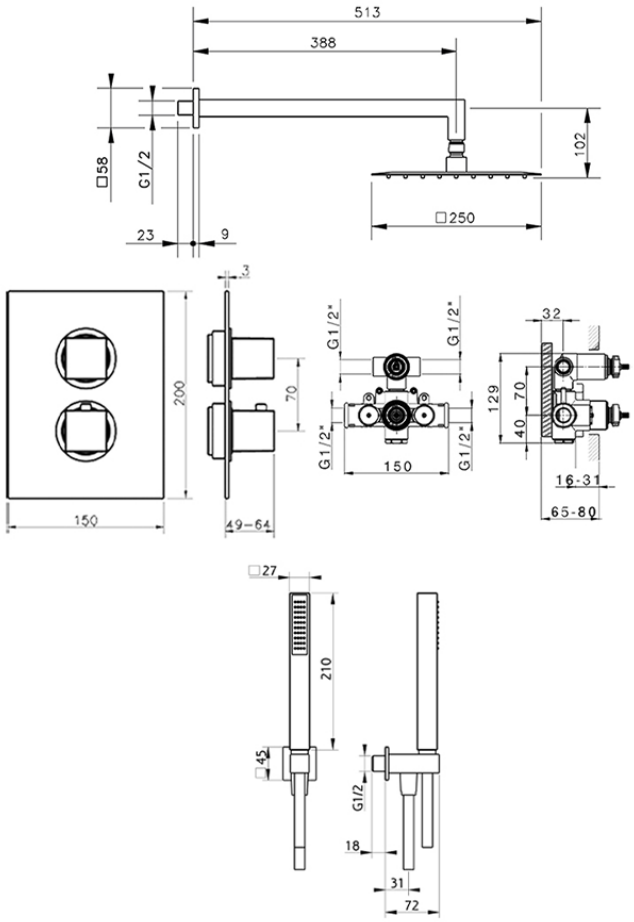

NE0KT010 https://en.huberitalia.com/concealed-thermostatic-shower-mixer-nuova-ego-ne0kt010

2026-06-06

© 2021 Huber. Via Brughiere, 50. 28017 - San Maurizio (NO) - Italy
Mail: huber@hubertitalia.com, Telefono: (+39) 0322 967783, P.Iva IT02422800033.