Lynox showerset LYNOX_SS010630

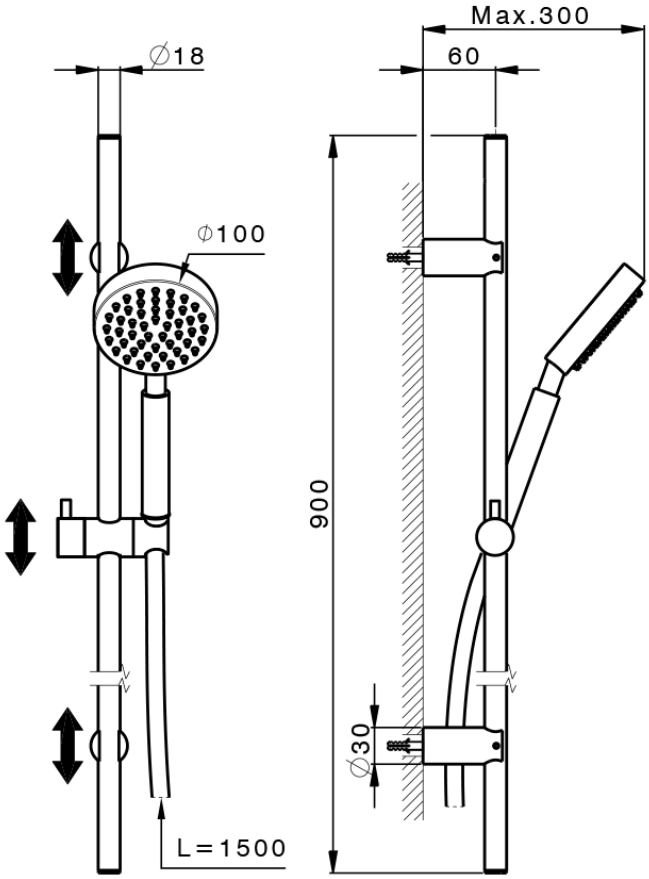

SS010630

https://en.huberitalia.com/lynox-showerset-lynox-ss010630

2026-05-31

© 2021 Huber. Via Brughiere, 50. 28017 - San Maurizio (NO) - Italy
Mail: huber@hubertitalia.com, Telefono: (+39) 0322 967783, P.Iva IT02422800033.