Huber
TEL. (+39) 0322 967783
MAIL. huber@huberitalia.com

Exposed part for concealed S.L. shower valve HARLOCK_HC003000



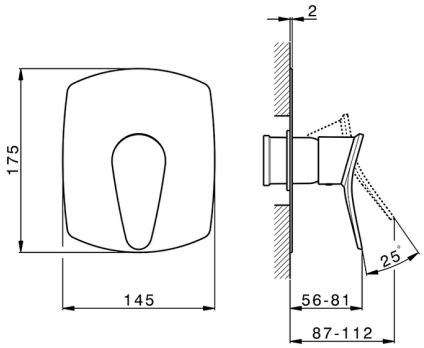

MODEL **HC003000**

Exposed part for concealed S.L.shower valve,without concealed part,for item ZB005300

AVAILABLE FINISHINGS

	21	21 Chrome
	2P	2P Rose Gold
	2Q	2Q Black Titanium
	40	40 Matt Black
	4Q	4Q Matt White
	6T	6T Chrome/Matt Black

CHARACTERISTICS

Installation	**Concealed**
Required concealed parts	**ZB005300**

© 2021 Huber. Via Brughiere, 50. 28017 - San Maurizio (NO) - Italy
Mail: huber@hubertitalia.com, Telefono: (+39) 0322 967783, P.Iva IT02422800033.

Huber
TEL. (+39) 0322 967783
MAIL. huber@huberitalia.com

Exposed part for concealed S.L. shower valve HARLOCK_HC003000

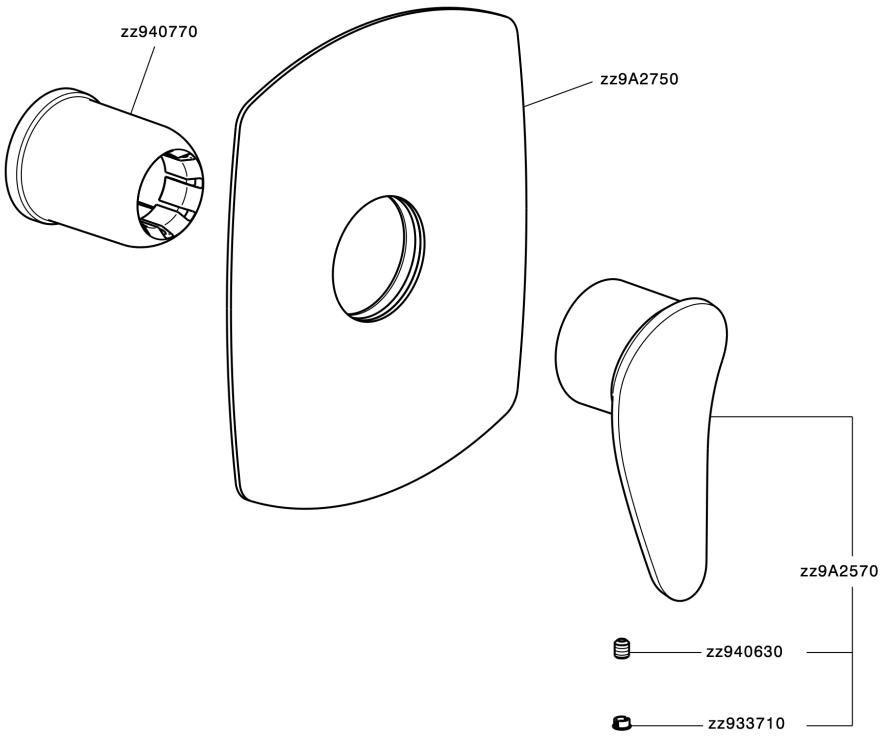

HC003000 https://en.huberitalia.com/exposed-part-for-concealed-s-l-shower-valve-harlock-hc003000

© 2021 Huber. Via Brughiere, 50. 28017 - San Maurizio (NO) - Italy
Mail: huber@hubertitalia.com, Telefono: (+39) 0322 967783, P.Iva IT02422800033.

Huber
TEL. (+39) 0322 967783
MAIL. huber@huberitalia.com

Concealed single lever shower valve CONCEALED_ZB005300



MODEL **ZB005300**

Concealed single lever shower valve,1/2" Concealed shower mixer,without trim kit

AVAILABLE FINISHINGS

04 04 Without finishing

CHARACTERISTICS

Installation	**Concealed**
Cartridge Spare Parts	**ZZ94035000**
35 mm Cartridge	
Concealed	**1**

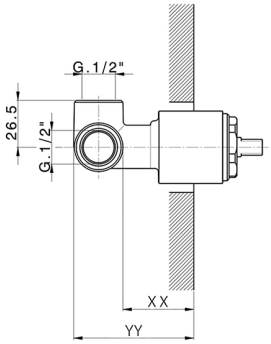

Piastra/Plate/Plaque/Platte/Placa
2-3mm: XX 27-47 YY 54-74
10mm: XX 16-40 YY 43-68

2026-11-23

© 2021 Huber. Via Brughiere, 50. 28017 - San Maurizio (NO) - Italy
Mail: huber@hubertitalia.com, Telefono: (+39) 0322 967783, P.Iva IT02422800033.