Huber
TEL. (+39) 0322 967783
MAIL. huber@huberitalia.com

Exposed part for Single Lever One Box Valve ONE BOX_K20BM010

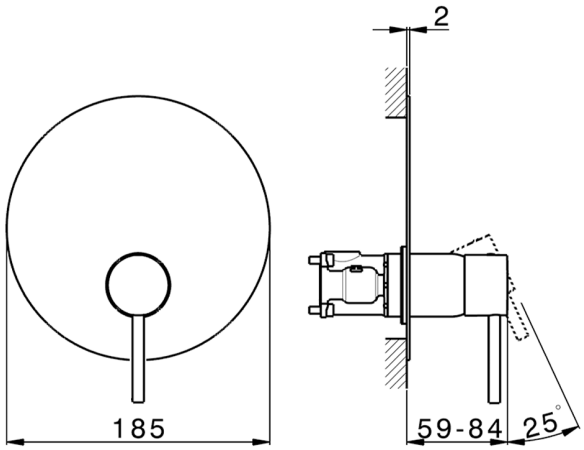

MODEL **K20BM010**

Exposed part for Single Lever One Box Valve,1 Outlet,Minimum depth of installation: 67 mm,without concealed part,for items ZB00B030-ZB00B031

AVAILABLE FINISHINGS

21 21 Chrome

26 26 Old Copper

2F 2F Brushed Nickel

2W 2W Brushed Gold

40 40 Matt Black

4Q 4Q Matt White

CHARACTERISTICS

Cartridge Spare Parts	**ZZ97179000**
35 mm Cartridge	
Installation	**Concealed**
Required concealed parts	**ZB00B031**
	ZB00B030

© 2021 Huber. Via Brughiere, 50. 28017 - San Maurizio (NO) - Italy
Mail: huber@hubertitalia.com, Telefono: (+39) 0322 967783, P.Iva IT02422800033.

Huber
TEL. (+39) 0322 967783
MAIL. huber@huberitalia.com

One Box Universal Concealed Part ONE BOX_ZB00B031

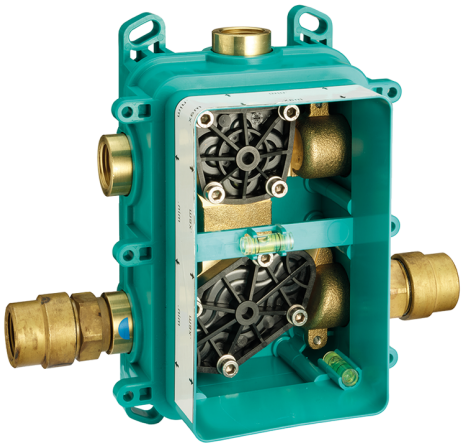

MODEL **ZB00B031**

One Box Universal Concealed Part,for 1 o 2 o 3 outlet thermostatic or single lever,without trim kit,with noise reducers,with sealing gasket

AVAILABLE FINISHINGS

04 04 Without finishing

CHARACTERISTICS

Concealed	**1**
Installation	**Concealed**

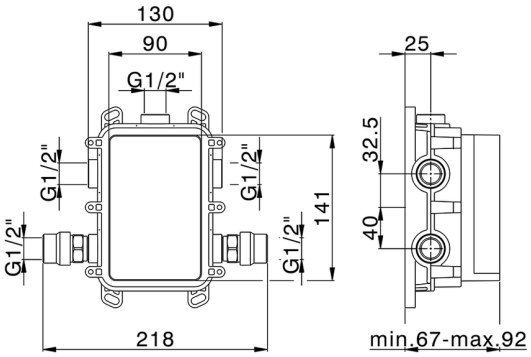

Thermostatic

The Huber thermostatic is your personal water manager, helping you to handle, control and save water and energy.

© 2021 Huber. Via Brughiere, 50. 28017 - San Maurizio (NO) - Italy
Mail: huber@hubertitalia.com, Telefono: (+39) 0322 967783, P.Iva IT02422800033.

Huber
TEL. (+39) 0322 967783
MAIL. huber@huberitalia.com

One Box Universal Concealed Part ONE BOX_ZB00B030

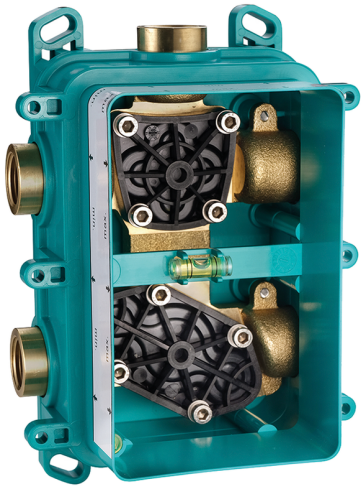

MODEL **ZB00B030**

One Box Universal Concealed Part,for 1 o 2 o 3 outlet thermostatic or single lever,without trim kit,without noise reducers,with sealing gasket

AVAILABLE FINISHINGS

04 04 Without finishing

CHARACTERISTICS

Concealed	**1**
Installation	**Concealed**

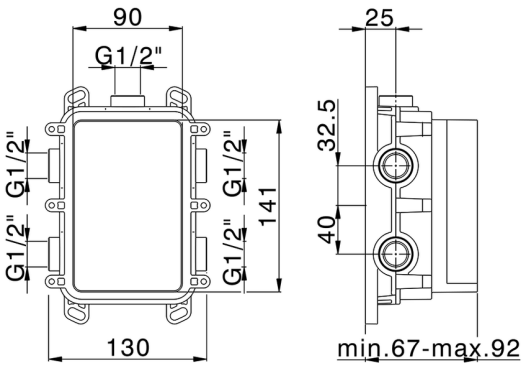

Thermostatic

The Huber thermostatic is your personal water manager, helping you to handle, control and save water and energy.

2026-10-28

© 2021 Huber. Via Brughiere, 50. 28017 - San Maurizio (NO) - Italy
Mail: huber@hubertitalia.com, Telefono: (+39) 0322 967783, P.Iva IT02422800033.