2-function Thermostatic shower set DADO_DDC78010

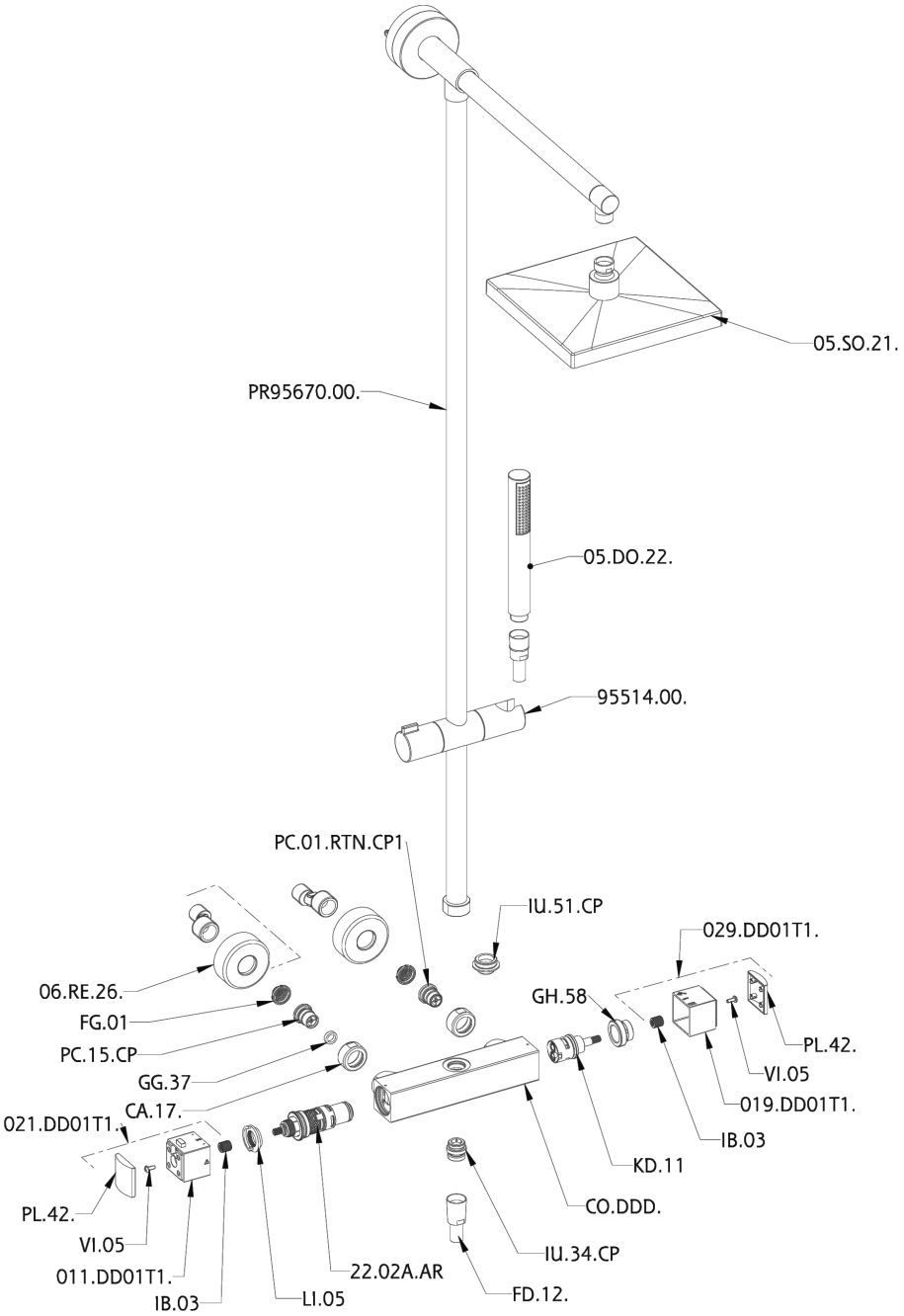

DDC78010

https://en.huberitalia.com/2-function-thermostatic-shower-set-dado-ddc78010

2026-05-16

© 2021 Huber. Via Brughiere, 50. 28017 - San Maurizio (NO) - Italy
Mail: huber@hubertitalia.com, Telefono: (+39) 0322 967783, P.Iva IT02422800033.