Huber
TEL. (+39) 0322 967783
MAIL. huber@huberitalia.com

Concealed thermostatic bath mixer CROISETTE_915.CS01H.

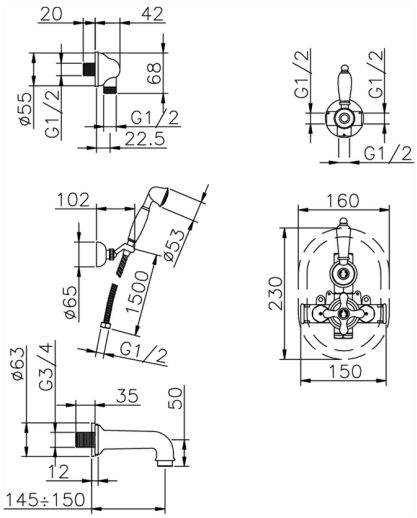

MODEL **915.CS01H.**

Concealed thermostatic bath mixer,1/2" Concealed Thermostatic Mixer,1/2" outlet stopvalve,2-outlet diverter,wall mounted adjustable handshower bracket,53 mm Brass classic one spray handshower,3/4 M 150 mm spout,1/2" wall elbow,150 cm Brass flexible hose

AVAILABLE FINISHINGS

AG AG Antique Gold

BA BA Old Bronze

CR CR Chrome

2W 2W Brushed Gold

CHARACTERISTICS

Cartridge Spare Parts **24.04A.PP**

8x20 Plus P Thermostatic Valve

Installation **Concealed**

Thermostatic

The Huber thermostatic is your personal water manager, helping you to handle, control and save water and energy.

2026-06-10

© 2021 Huber. Via Brughiere, 50. 28017 - San Maurizio (NO) - Italy
Mail: huber@hubertitalia.com, Telefono: (+39) 0322 967783, P.Iva IT02422800033.