Huber
TEL. (+39) 0322 967783
MAIL. huber@huberitalia.com

Concealed thermostatic shower mixer NUOVA EGO

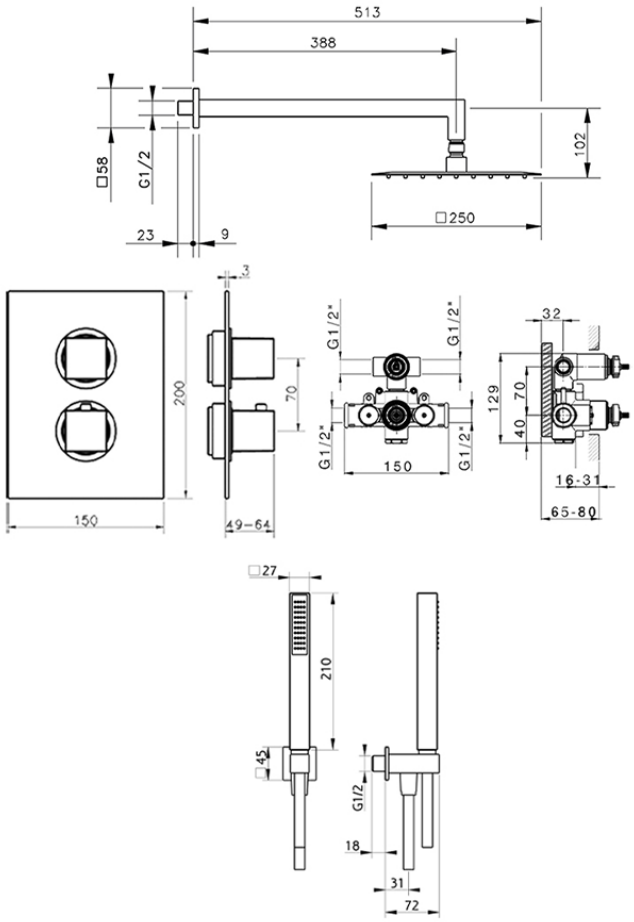

NE0KT010

https://en.huberitalia.com/concealed-thermostatic-shower-mixer-nuova-egone0kt010

2024-05-07

© 2021 Huber. Via Brughiere, 50. 28017 - San Maurizio (NO) - Italy
Mail: huber@hubertitalia.com, Telefono: (+39) 0322 967783, P.Iva IT02422800033.