1"1/4 waste for basin mixer COMPONENTS_ZB001613

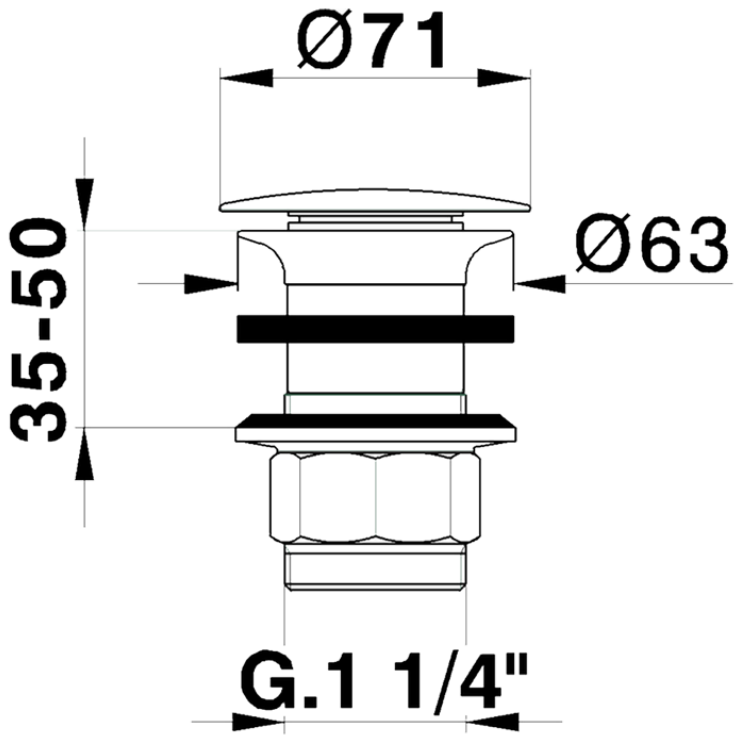

ZB001613

https://en.huberitalia.com/11-4-waste-for-basin-mixer-components-zb001613

2026-10-28

© 2021 Huber. Via Brughiere, 50. 28017 - San Maurizio (NO) - Italy
Mail: huber@hubertitalia.com, Telefono: (+39) 0322 967783, P.Iva IT02422800033.