Fixed heated towel rail Ø18mm_BATHROOM ACCESSORIES_ZB004920

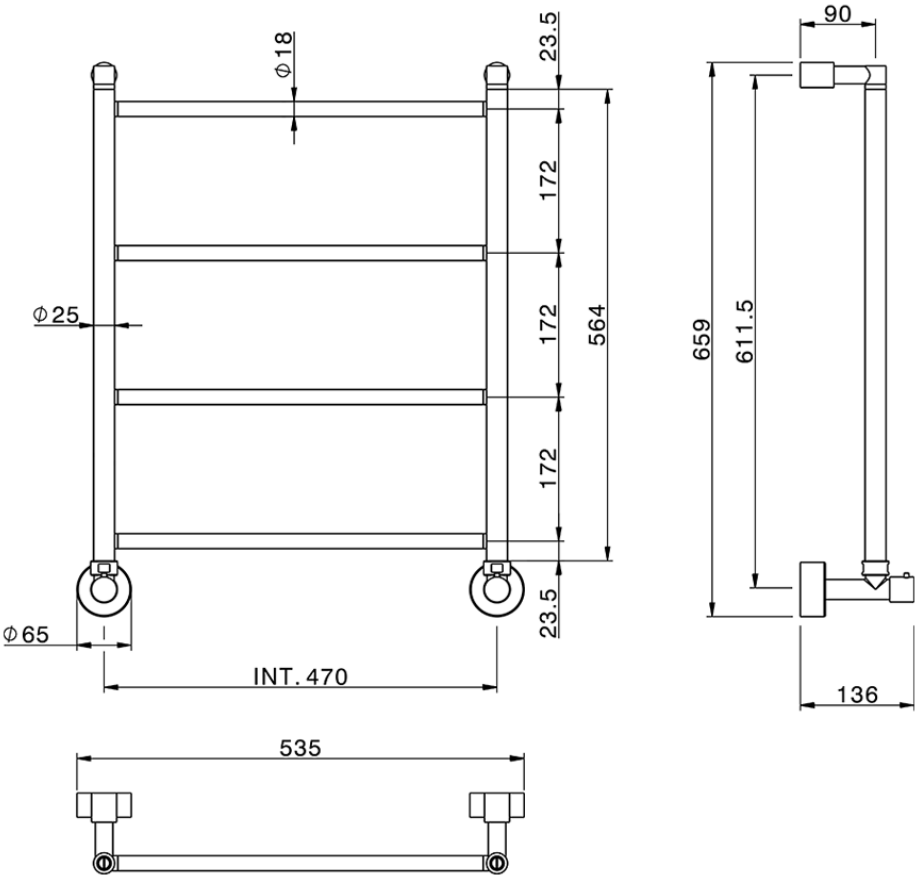

ZB004920 https://en.huberitalia.com/fixed-heated-towel-rail-o18mm-bathroom-accessories-zb004920

2026-06-26

© 2021 Huber. Via Brughiere, 50. 28017 - San Maurizio (NO) - Italy
Mail: huber@hubertitalia.com, Telefono: (+39) 0322 967783, P.Iva IT02422800033.