Wall-mounted rectangular round showerhead ZEN_ZS122030

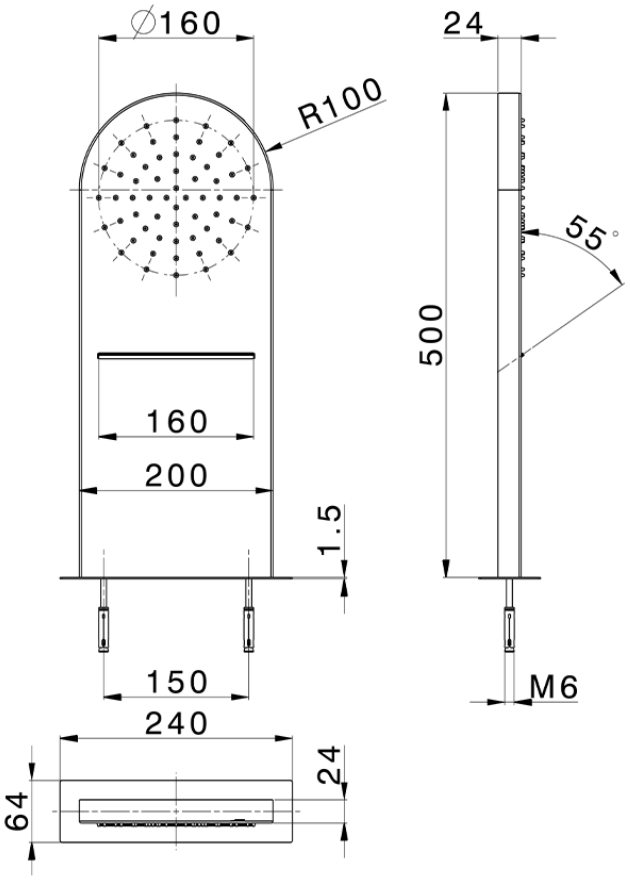

ZS122030 https://en.huberitalia.com/wall-mounted-rectangular-round-showerhead-zen-zs122030

2026-06-06

© 2021 Huber. Via Brughiere, 50. 28017 - San Maurizio (NO) - Italy
Mail: huber@hubertitalia.com, Telefono: (+39) 0322 967783, P.Iva IT02422800033.