# Thermostatic bath mixer SUITE_SUT27010

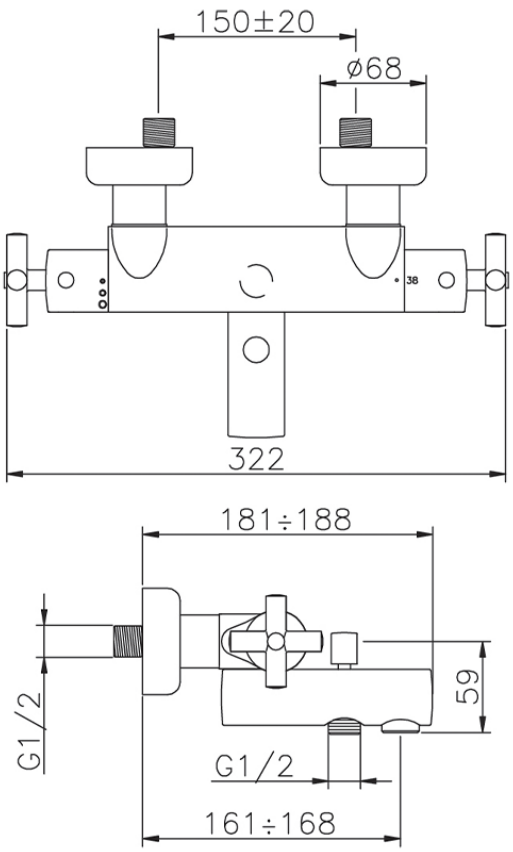


SUT27010

https://en.huberitalia.com/thermostatic-bath-mixer-suite-sut27010

2026-11-25

© 2021 Huber. Via Brughiere, 50. 28017 - San Maurizio (NO) - Italy
Mail: huber@hubertitalia.com, Telefono: (+39) 0322 967783, P.Iva IT02422800033.