Huber
TEL. (+39) 0322 967783
MAIL. huber@huberitalia.com

Thermostatic bath mixer SUITE_SUT27010



MODEL **SUT27010**

Thermostatic bath mixer,without shower set,1/2"M flexible connection

AVAILABLE FINISHINGS

21 21 Chrome

40 40 Matt Black

2F 2F Brushed Nickel

2W 2W Brushed Gold

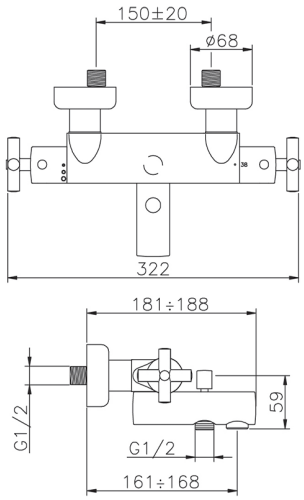

CHARACTERISTICS

Cartridge Spare Parts **24.04A.PP**

8x20 Plus P Thermostatic Valve

Thermostatic

The Huber thermostatic is your personal water manager, helping you to handle, control and save water and energy.

© 2021 Huber. Via Brughiere, 50. 28017 - San Maurizio (NO) - Italy
Mail: huber@hubertitalia.com, Telefono: (+39) 0322 967783, P.Iva IT02422800033.

Thermostatic bath mixer SUITE_SUT27010

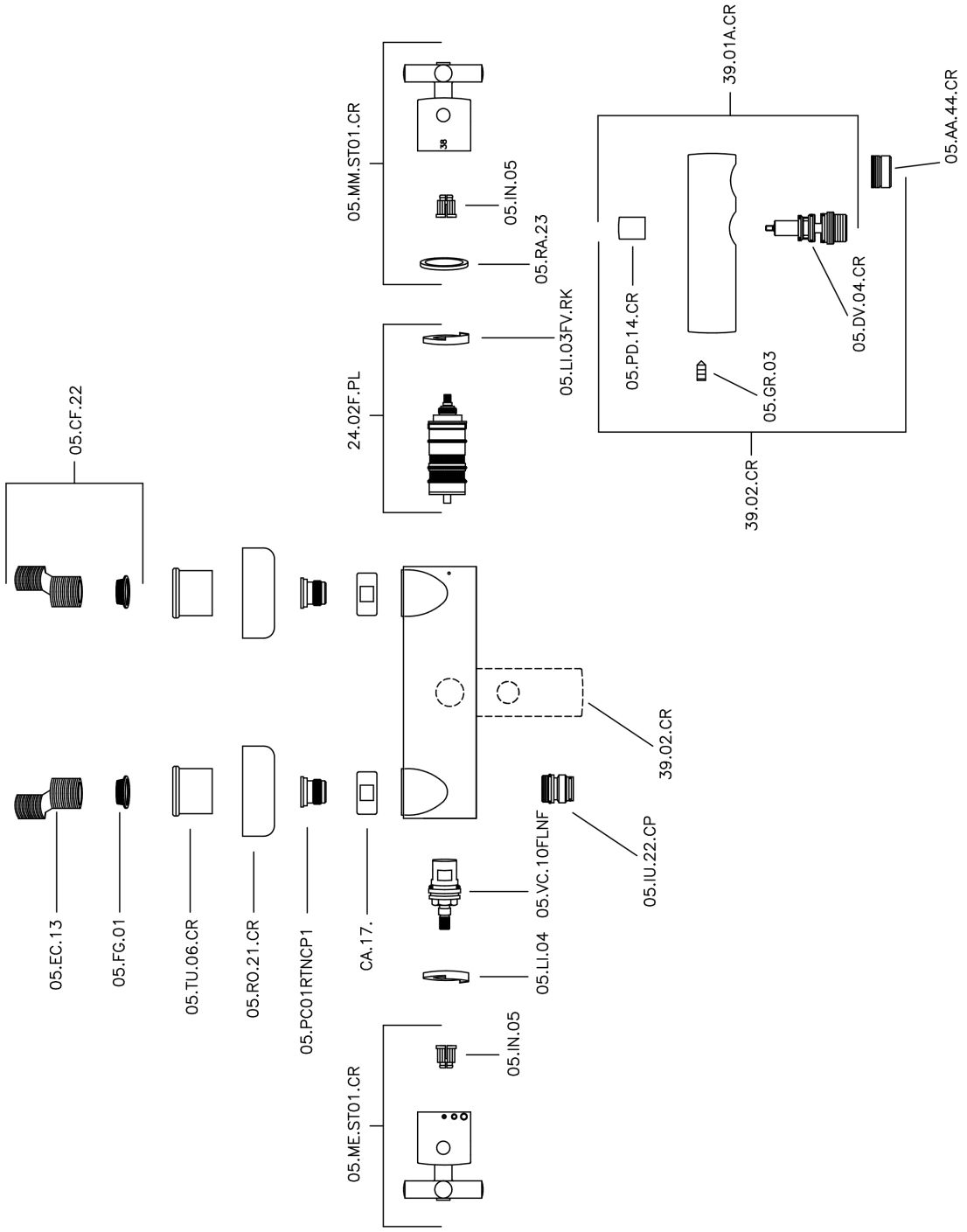

SUT27010

https://en.huberitalia.com/thermostatic-bath-mixer-suite-sut27010

2026-11-25

© 2021 Huber. Via Brughiere, 50. 28017 - San Maurizio (NO) - Italy
Mail: huber@hubertitalia.com, Telefono: (+39) 0322 967783, P.Iva IT02422800033.