Huber
TEL. (+39) 0322 967783
MAIL. huber@huberitalia.com

Thermostatic shower mixer with sliding bar CROISETTE_190R.CS01H.



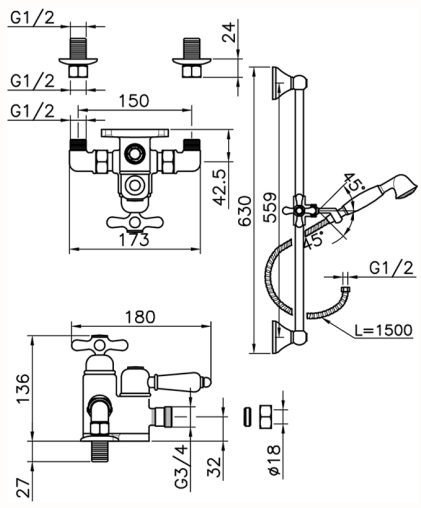

MODEL **190R.CS01H.**

Thermostatic shower mixer with sliding bar,56 cm
Sliding rail kit with sliding bracket,D.53 mm Brass
Classic One Spray handshower,150 cm Brass flexible hose

AVAILABLE FINISHINGS

AG AG Antique Gold

BA BA Old Bronze

CR CR Chrome

2W 2W Brushed Gold

CHARACTERISTICS

Cartridge Spare Parts **24.04A.PP**

8x20 Plus P Thermostatic Valve

Thermostatic

The Huber thermostatic is your personal water manager, helping you to handle, control and save water and energy.

2026-11-24

© 2021 Huber. Via Brughiere, 50. 28017 - San Maurizio (NO) - Italy
Mail: huber@hubertitalia.com, Telefono: (+39) 0322 967783, P.Iva IT02422800033.