Huber
TEL. (+39) 0322 967783
MAIL. huber@huberitalia.com

Bidet mixer SUITE_SU000550

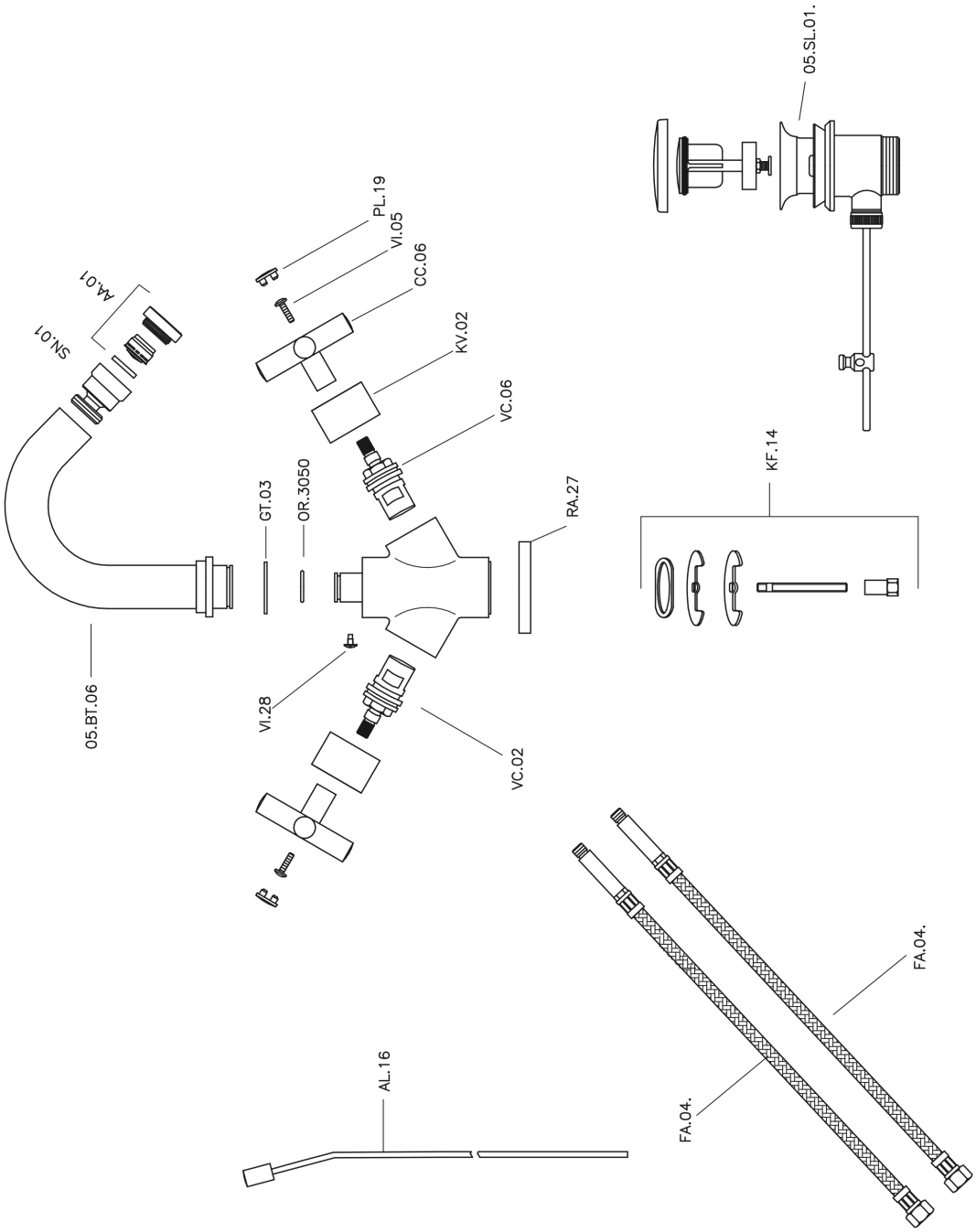

SU000550

https://en.huberitalia.com/bidet-mixer-suite-su000550

2026-05-02

© 2021 Huber. Via Brughiere, 50. 28017 - San Maurizio (NO) - Italy
Mail: huber@hubertitalia.com, Telefono: (+39) 0322 967783, P.Iva IT02422800033.