Washbasin 3-holes mixer NUOVA KIRUNA_K2001060

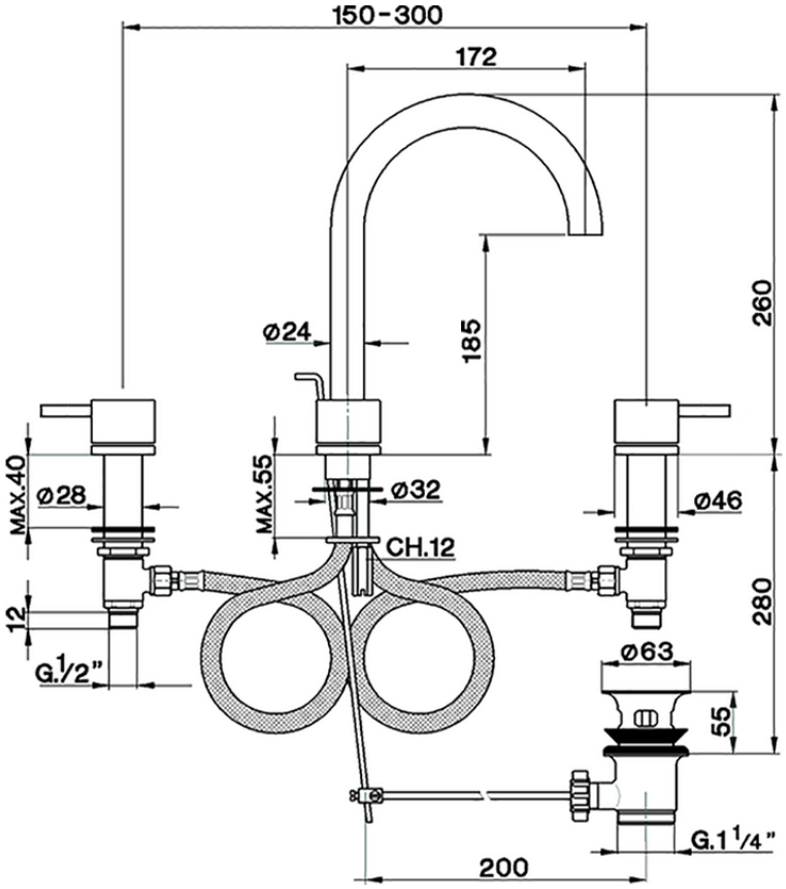

K2001060

https://en.huberitalia.com/washbasin-3-holes-mixer-nuova-kiruna-k2001060

2026-04-08

© 2021 Huber. Via Brughiere, 50. 28017 - San Maurizio (NO) - Italy
Mail: huber@hubertitalia.com, Telefono: (+39) 0322 967783, P.Iva IT02422800033.