Washbasin 3-holes mixer NUOVA KIRUNA_K2001060

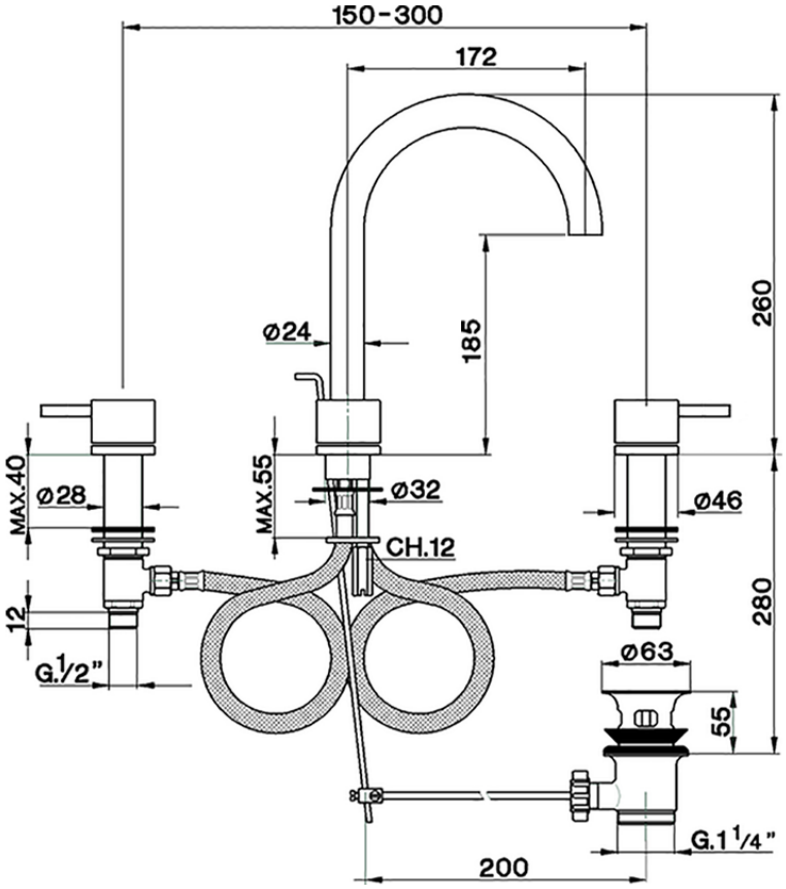

K2001060 https://en.huberitalia.com/washbasin-3-holes-mixer-nuova-kiruna-k2001060

2026-06-13