# Thermostatic bath-shower mixer with sliding bar VICTORIAN_VTS27010

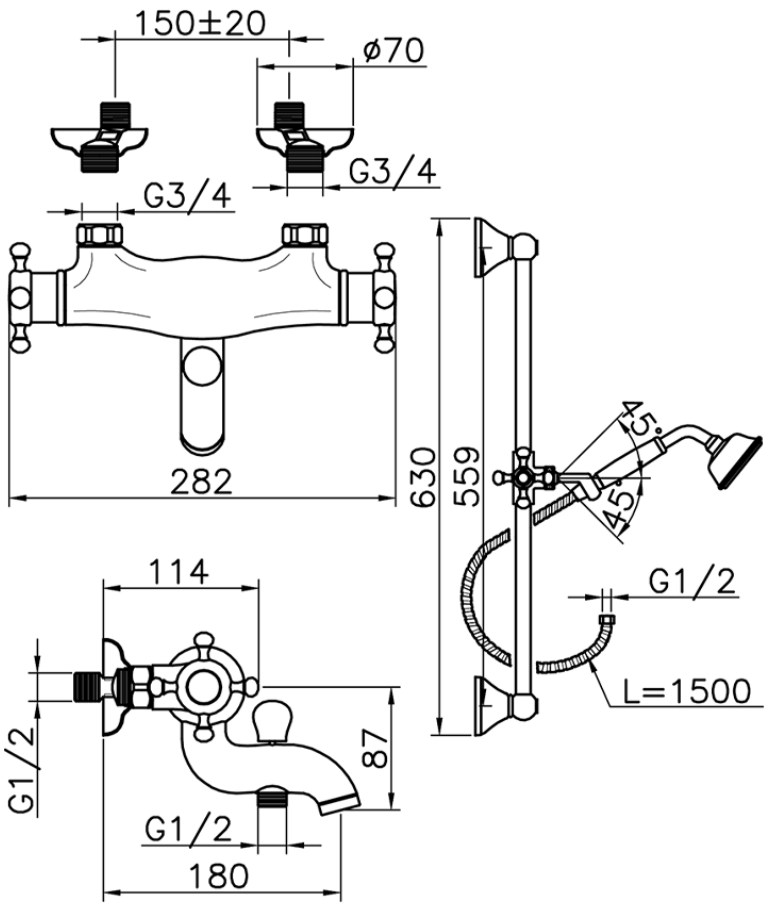


VTS27010 https://en.huberitalia.com/thermostatic-bath-shower-mixer-with-sliding-bar-victorian-vts27010

2026-10-29

© 2021 Huber. Via Brughiere, 50. 28017 - San Maurizio (NO) - Italy
Mail: huber@hubertitalia.com, Telefono: (+39) 0322 967783, P.Iva IT02422800033.