3-function Thermostatic shower set CROISETTE_592.CS01H.

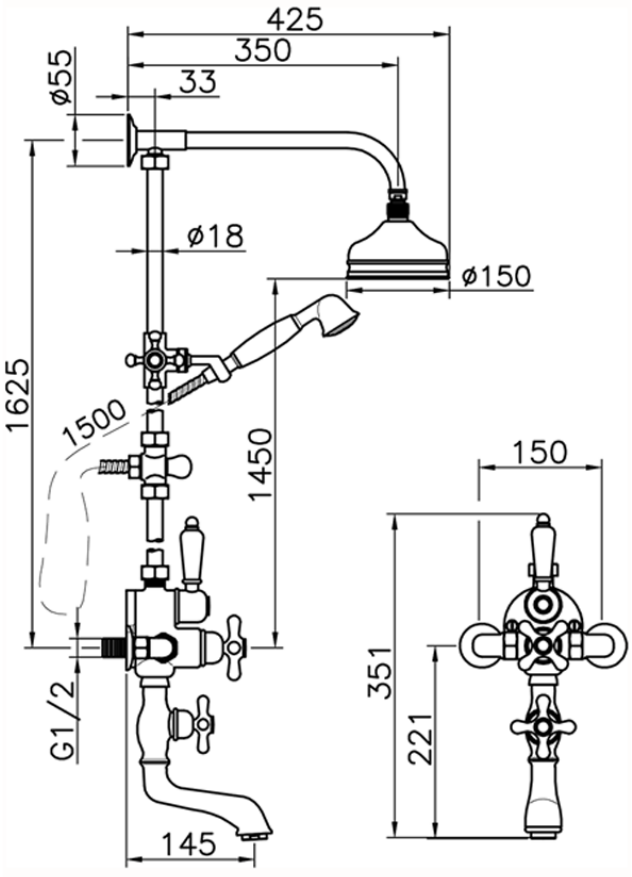

592.CS01H. https://en.huberitalia.com/3-function-thermostatic-shower-set-croisette-592-cs01h

2026-05-16