2-function Bath-shower column COLUMNS_AC904051

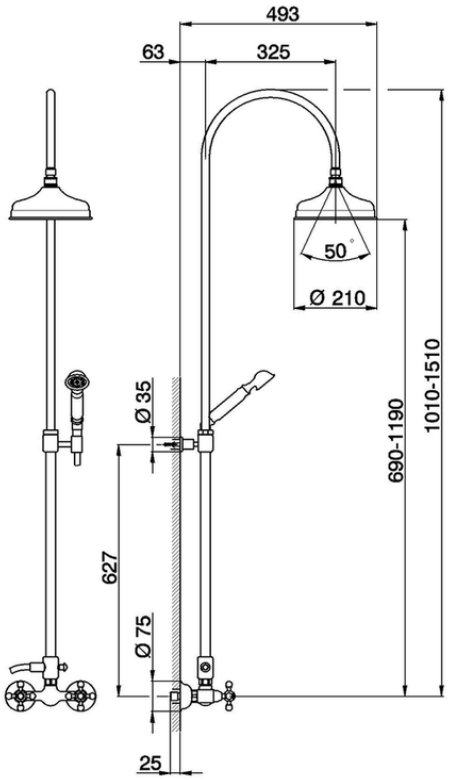

AC904051 https://en.huberitalia.com/2-function-bath-shower-column-columns-ac904051

2025-04-27

© 2021 Huber. Via Brughiere, 50. 28017 - San Maurizio (NO) - Italy
Mail: huber@hubertitalia.com, Telefono: (+39) 0322 967783, P.Iva IT02422800033.