Concealed stop valve VICTORIAN_VT000310

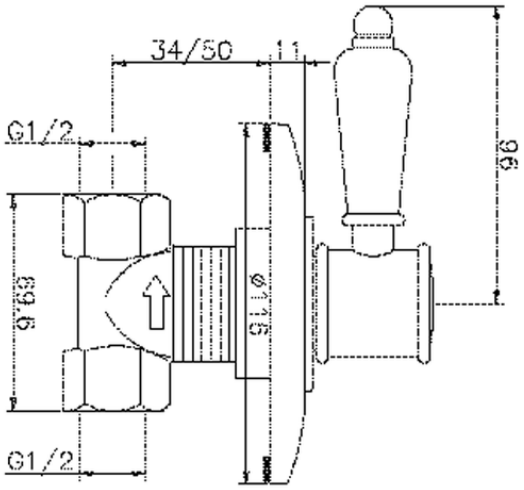

VT000310

https://en.huberitalia.com/concealed-stop-valve-victorian-vt000310

2026-04-05

© 2021 Huber. Via Brughiere, 50. 28017 - San Maurizio (NO) - Italy
Mail: huber@hubertitalia.com, Telefono: (+39) 0322 967783, P.Iva IT02422800033.