Shower set SHOWER_SS012230

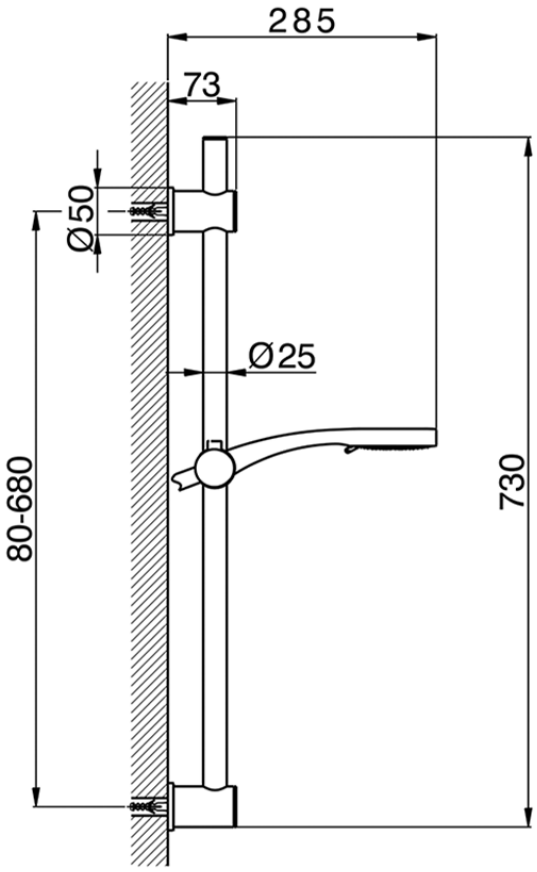

SS012230

https://en.huberitalia.com/shower-set-shower-ss012230

2026-06-26

© 2021 Huber. Via Brughiere, 50. 28017 - San Maurizio (NO) - Italy
Mail: huber@hubertitalia.com, Telefono: (+39) 0322 967783, P.Iva IT02422800033.