Huber
TEL. (+39) 0322 967783
MAIL. huber@huberitalia.com

Concealed thermostatic shower set VICTORIAN_912.VT01H.

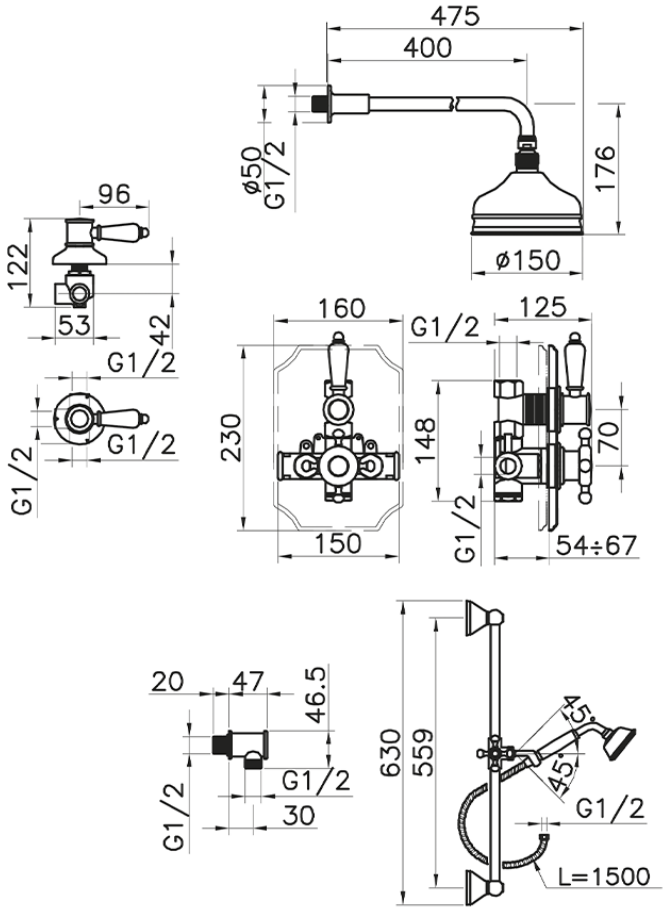

912.VT01H. https://en.huberitalia.com/concealed-thermostatic-shower-set-victorian-912-vt01h

2026-04-30

© 2021 Huber. Via Brughiere, 50. 28017 - San Maurizio (NO) - Italy
Mail: huber@hubertitalia.com, Telefono: (+39) 0322 967783, P.Iva IT02422800033.