Huber
TEL. (+39) 0322 967783
MAIL. huber@huberitalia.com

1 Function thermostatic concealed valve PUSH&SHOWER_ZB0G61R0

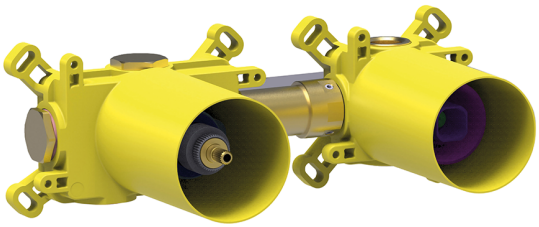

MODEL **ZB0G61R0**

1 Function thermostatic concealed valve,ON/OFF button with flow rate regulation,with protection guard box,to match with exposed parts: 1 Thermo 1Push&Shower,without Thermo/Push&Shower exposed parts

AVAILABLE FINISHINGS

04 04 Without finishing

CHARACTERISTICS

Cartridge Spare Parts **22.04A.AR - ZZ97279004**

Argo 2 (long filter) Thermostatic Valve

Concealed **1**

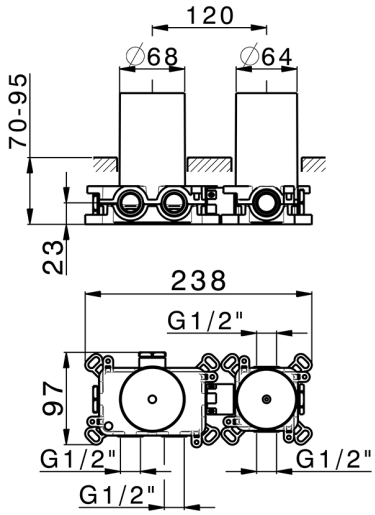

Thermostatic

The Huber thermostatic is your personal water manager, helping you to handle, control and save water and energy.

2026-05-02

© 2021 Huber. Via Brughiere, 50. 28017 - San Maurizio (NO) - Italy
Mail: huber@hubertitalia.com, Telefono: (+39) 0322 967783, P.Iva IT02422800033.