Concealed thermostatic shower mixer KIRUNA

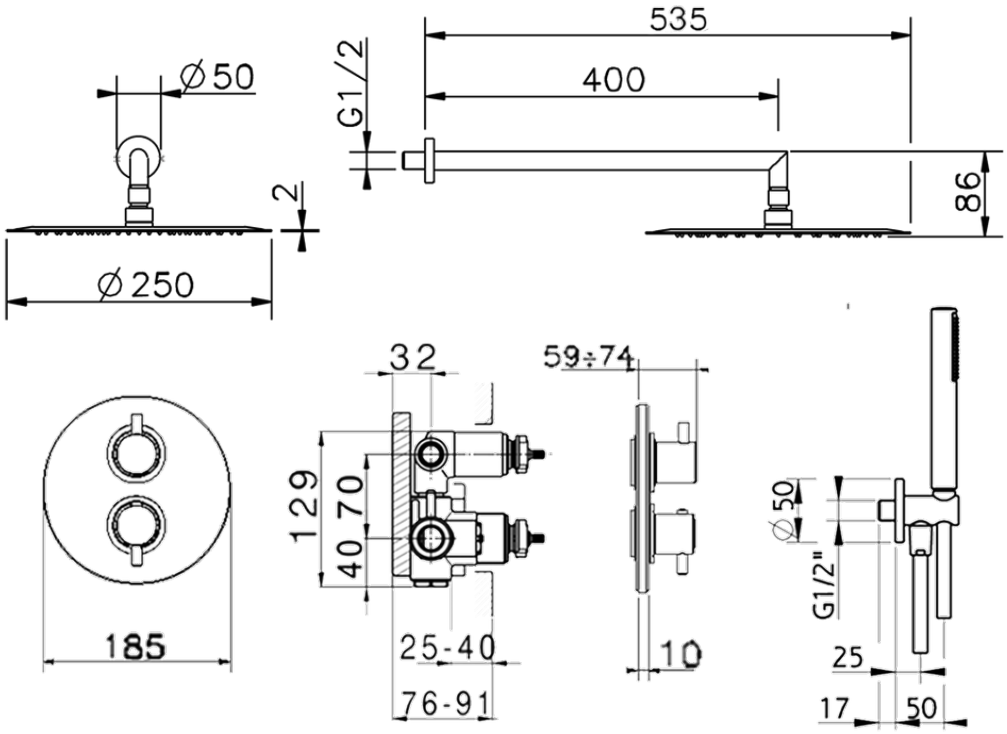

KR0KT010

https://en.huberitalia.com/concealed-thermostatic-shower-mixer-kirunakr0kt010

2024-05-07