3-functions Thermostatic bath set COLUMNS

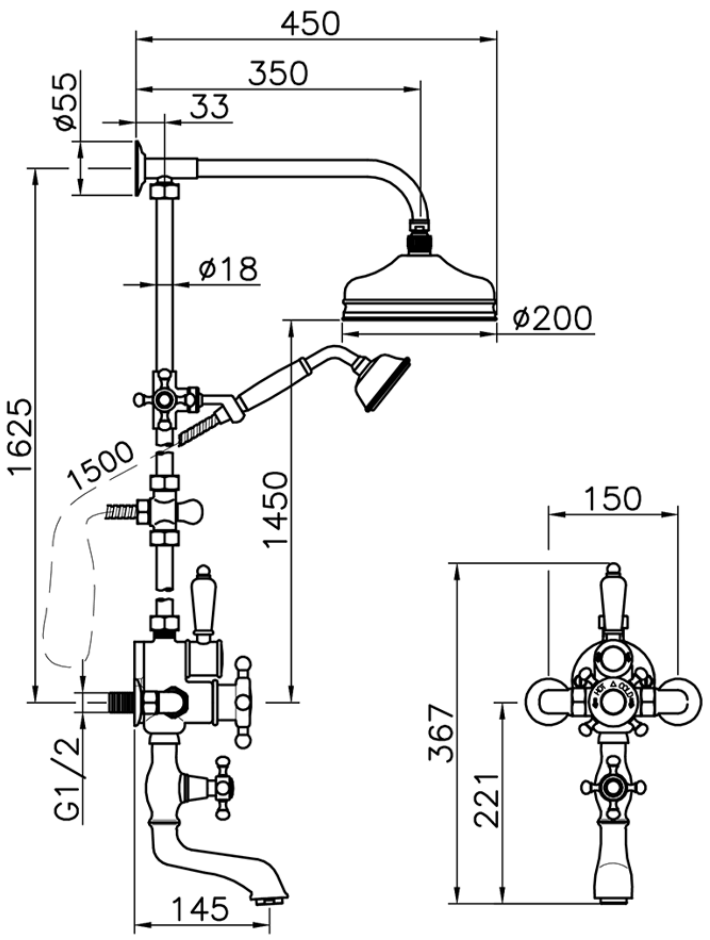

592.VT21H.

https://en.huberitalia.com/3-functions-thermostatic-bath-set-columns592-vt21h

2024-05-14