Single lever bath mixer, with full equipment NORMA_NM000093

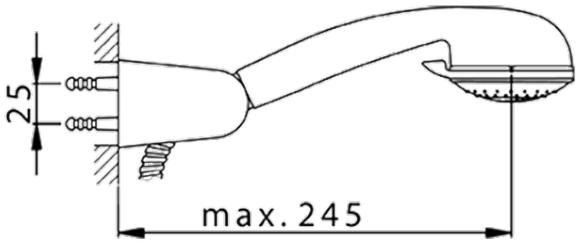

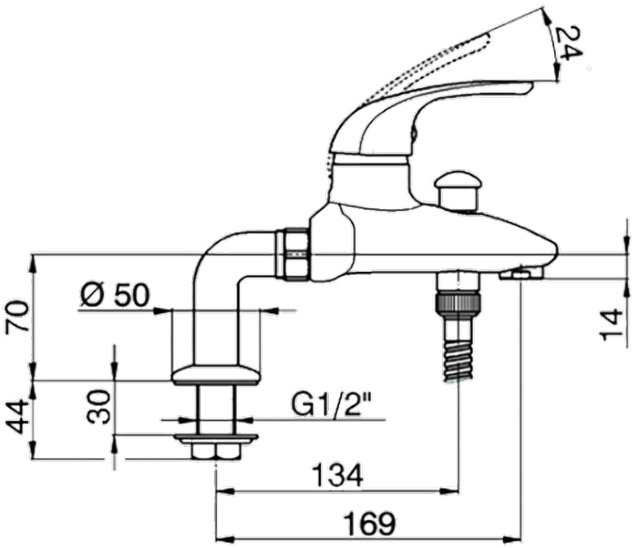

NM000093 https://en.huberitalia.com/single-lever-bath-mixer-with-full-equipment-norma-nm000093

2026-06-15

© 2021 Huber. Via Brughiere, 50. 28017 - San Maurizio (NO) - Italy
Mail: huber@hubertitalia.com, Telefono: (+39) 0322 967783, P.Iva IT02422800033.