3-function Thermostatic shower set COLUMNS_592.VN31H.

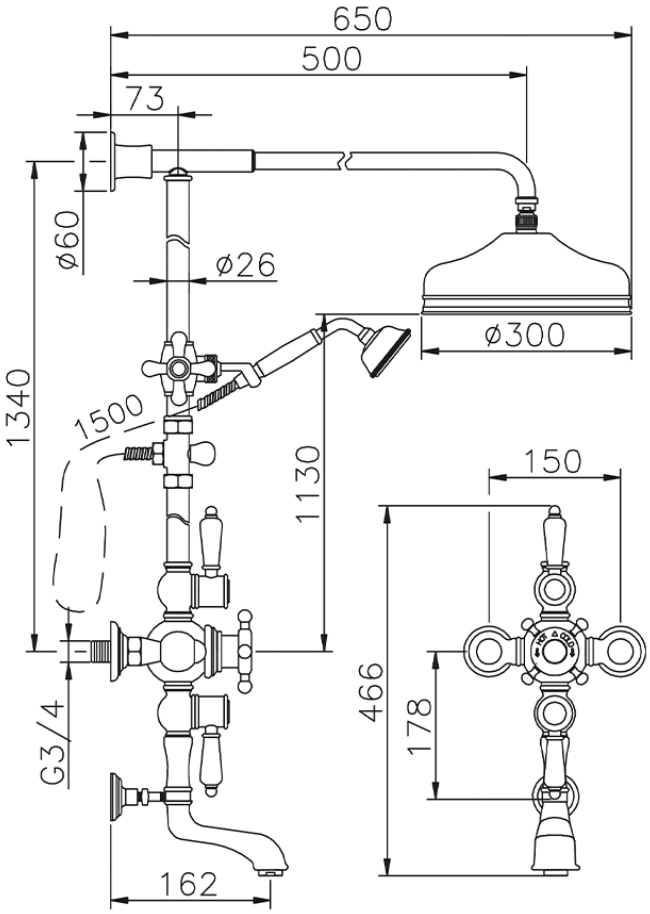

592.VN31H.

https://en.huberitalia.com/3-function-thermostatic-shower-set-columns-592-vn31h

2025-04-24