Huber
TEL. (+39) 0322 967783
MAIL. huber@huberitalia.com

Thermostatic bath mixer, with shower set VICTORIAN_VTD27010

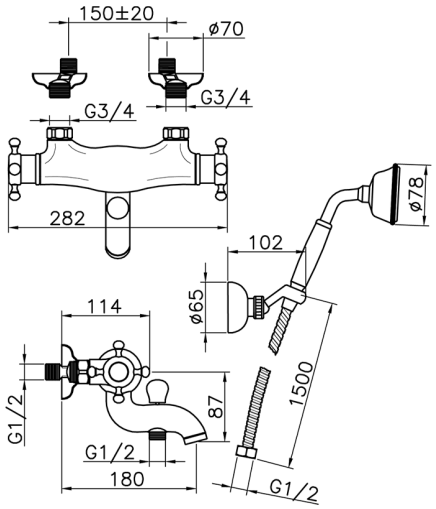

MODEL **VTD27010**

Thermostatic bath mixer, with shower set,wall mounted hand shower holder with swivel,78 mm Brass Classic One spray Handshower,150 cm Brass flexible hose

AVAILABLE FINISHINGS

21 21 Chrome

27 27 Old Bronze

2A 2A Satin Brushed Nickel

2G 2G Antique Gold

2W 2W Brushed Gold

CHARACTERISTICS

Cartridge Spare Parts **24.04A.PP**

8x20 Plus P Thermostatic Valve

Thermostatic

The Huber thermostatic is your personal water manager, helping you to handle, control and save water and energy.

2026-05-02

© 2021 Huber. Via Brughiere, 50. 28017 - San Maurizio (NO) - Italy
Mail: huber@hubertitalia.com, Telefono: (+39) 0322 967783, P.Iva IT02422800033.