Single lever washbasin mixer LEVITY_LY001510

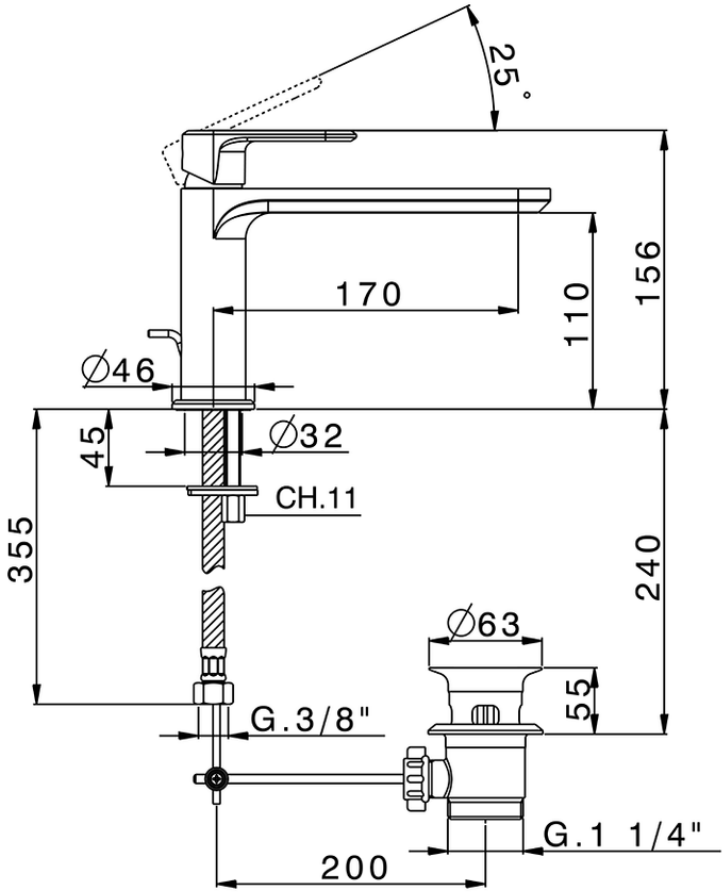

LY001510

https://en.huberitalia.com/single-lever-washbasin-mixer-levity-ly001510

2026-05-15