Single lever tall washbasin mixer SOFT_SF001520

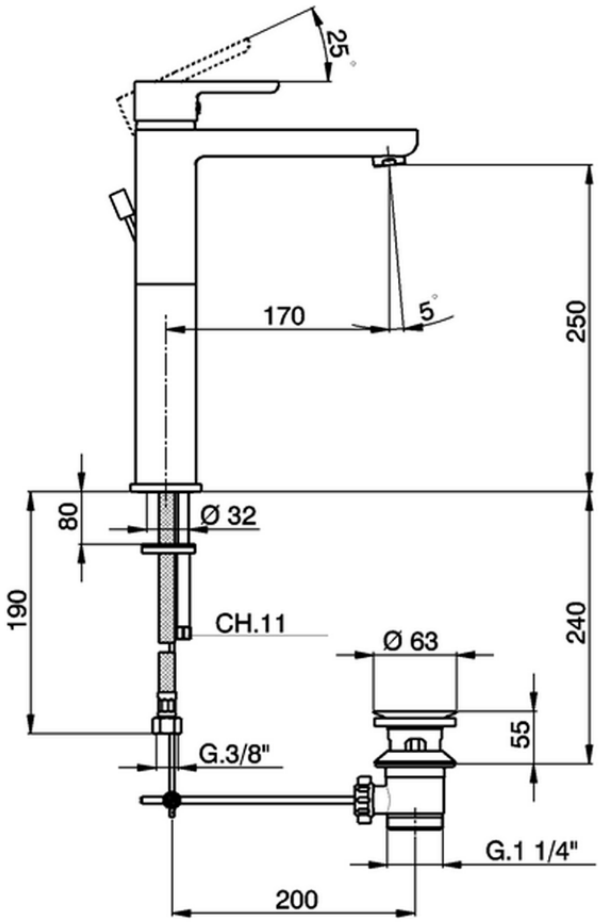

SF001520

https://en.huberitalia.com/single-lever-tall-washbasin-mixer-soft-sf001520

2026-06-27

© 2021 Huber. Via Brughiere, 50. 28017 - San Maurizio (NO) - Italy
Mail: huber@hubertitalia.com, Telefono: (+39) 0322 967783, P.Iva IT02422800033.