Exposed simple tap EVA_EV001440

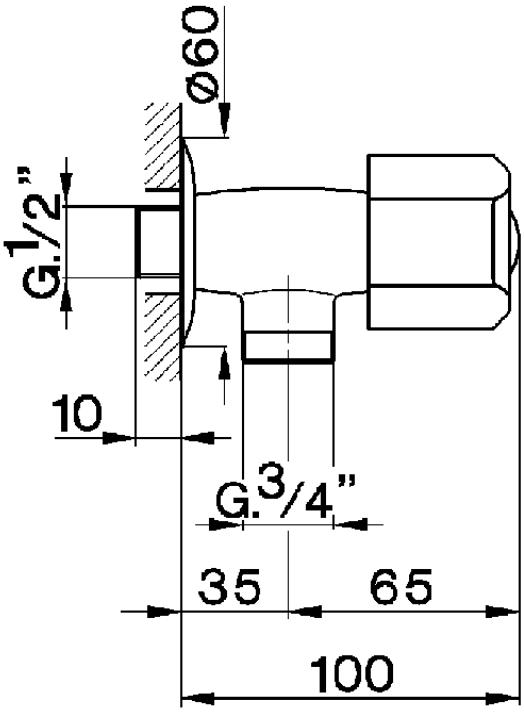

EV001440

https://en.huberitalia.com/exposed-simple-tap-eva-ev001440

2026-01-11

© 2021 Huber. Via Brughiere, 50. 28017 - San Maurizio (NO) - Italy
Mail: huber@hubertitalia.com, Telefono: (+39) 0322 967783, P.Iva IT02422800033.