Single lever sink mixer with extrac.shower KITCHEN_AY902570

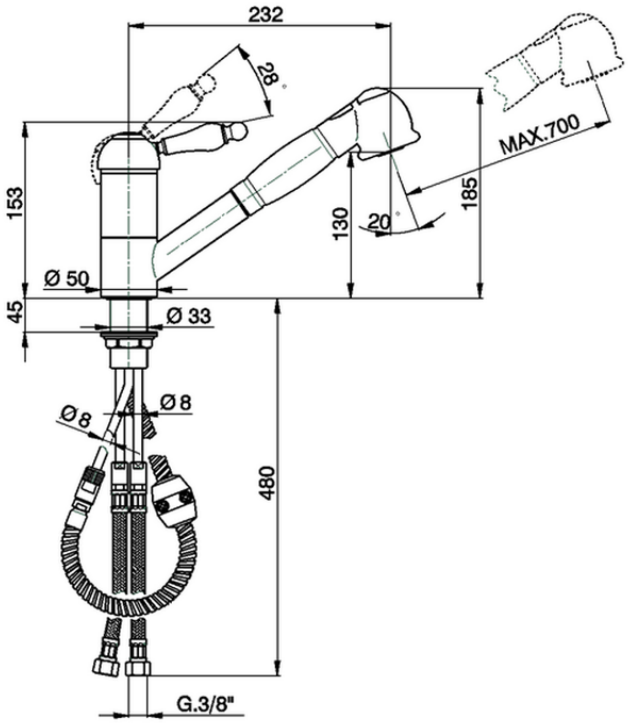

AY902570 https://en.huberitalia.com/single-lever-sink-mixer-with-extrac-shower-kitchen-ay902570

2026-05-01