Shower set SHOWER_SS018240

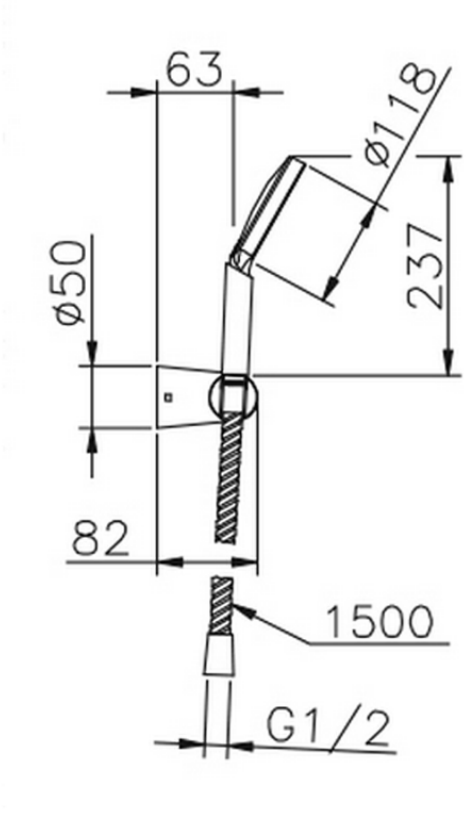

SS018240

https://en.huberitalia.com/shower-set-shower-ss018240

2026-04-07