Shower set SHOWER_SS018240

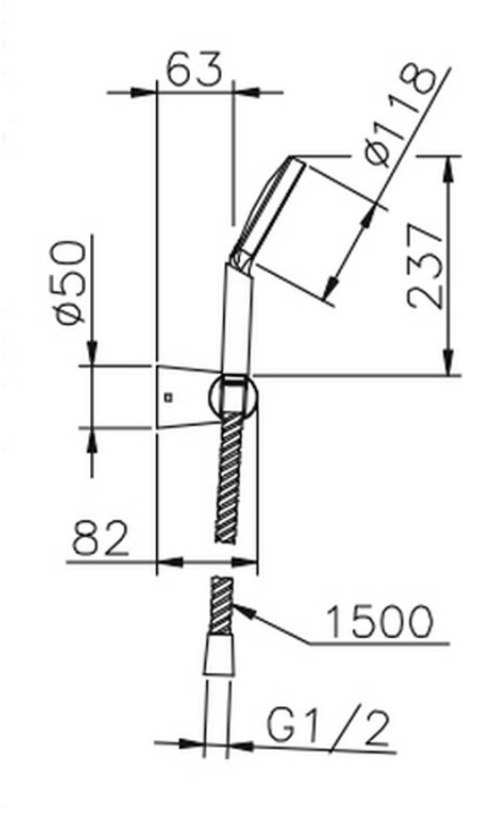

SS018240

https://en.huberitalia.com/shower-set-shower-ss018240

2026-04-28

© 2021 Huber. Via Brughiere, 50. 28017 - San Maurizio (NO) - Italy
Mail: huber@hubertitalia.com, Telefono: (+39) 0322 967783, P.Iva IT02422800033.