# Deck-mounted 5-hole bath mixer LYNOX_LX000260

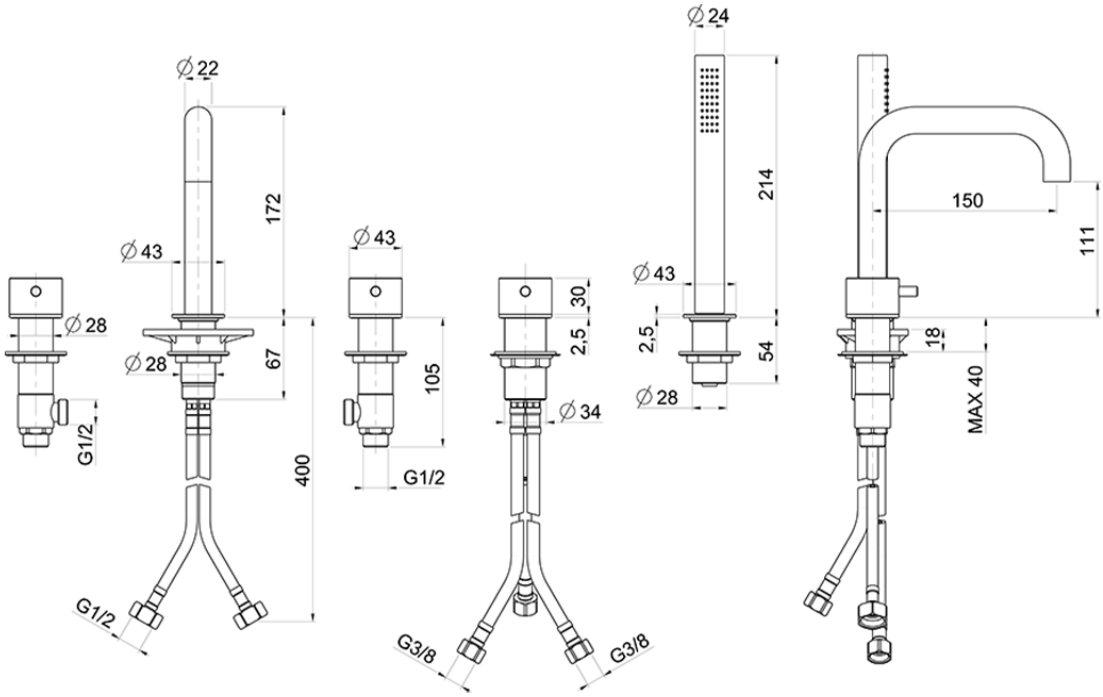


LX000260

https://en.huberitalia.com/deck-mounted-5-hole-bath-mixer-lynox-lx000260

2026-04-26

© 2021 Huber. Via Brughiere, 50. 28017 - San Maurizio (NO) - Italy
Mail: huber@hubertitalia.com, Telefono: (+39) 0322 967783, P.Iva IT02422800033.