Huber
TEL. (+39) 0322 967783
MAIL. huber@huberitalia.com

Deck-mounted 5-hole bath mixer LYNOX_LX000260

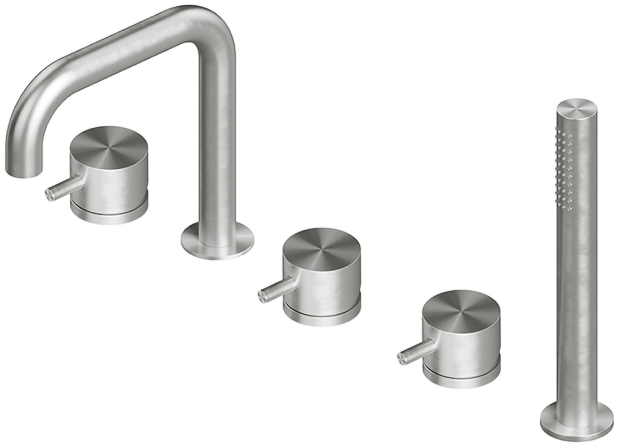

MODEL **LX000260**

Deck-mounted 5-hole bath mixer,progressive mixing,with water spout,D.24 mm INOX minimalistic one spray handshower,150 cm pull-out flexible hose - INOX AISI 316L

AVAILABLE FINISHINGS

D1 D1 Brushed Inox

CHARACTERISTICS

Cartridge Spare Parts **ZZ97179000**

35 mm Cartridge

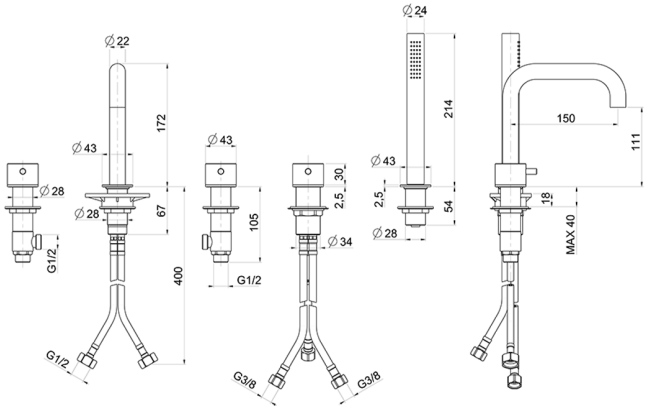

2026-05-17

© 2021 Huber. Via Brughiere, 50. 28017 - San Maurizio (NO) - Italy
Mail: huber@hubertitalia.com, Telefono: (+39) 0322 967783, P.Iva IT02422800033.