Bidet handshower set HYGENIC SHOWERS_TT007900

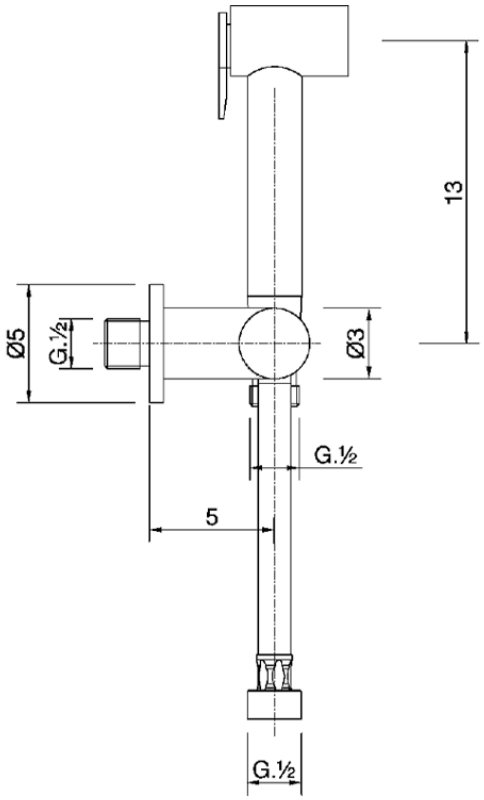

TT007900

https://en.huberitalia.com/bidet-handshower-set-hygenic-showers-tt007900

2026-04-30

© 2021 Huber. Via Brughiere, 50. 28017 - San Maurizio (NO) - Italy
Mail: huber@hubertitalia.com, Telefono: (+39) 0322 967783, P.Iva IT02422800033.