Huber
TEL. (+39) 0322 967783
MAIL. huber@huberitalia.com

Thermostatic washbasin mixer CLINIC&TECHNICAL_CLT52010

MODEL **CLT52010**

Thermostatic washbasin mixer,with 1"1/4 pop-up waste,swivel spout,G.3/8" stainless steel flexible hose

AVAILABLE FINISHINGS

21 21 Chrome

CHARACTERISTICS

Cartridge Spare Parts **24.04A.PP**

8x20 Plus P Thermostatic Valve

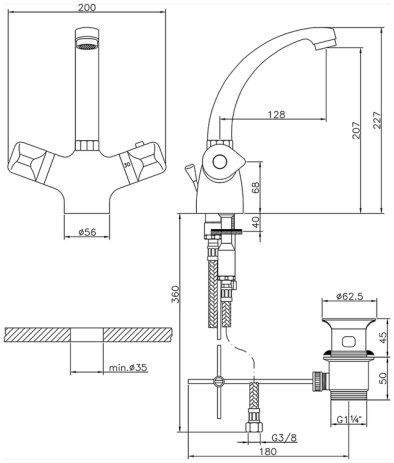

Thermostatic

The Huber thermostatic is your personal water manager, helping you to handle, control and save water and energy.

2026-05-16

© 2021 Huber. Via Brughiere, 50. 28017 - San Maurizio (NO) - Italy
Mail: huber@hubertitalia.com, Telefono: (+39) 0322 967783, P.Iva IT02422800033.