2-function Thermostatic shower set COLUMNS_590.VT01H.

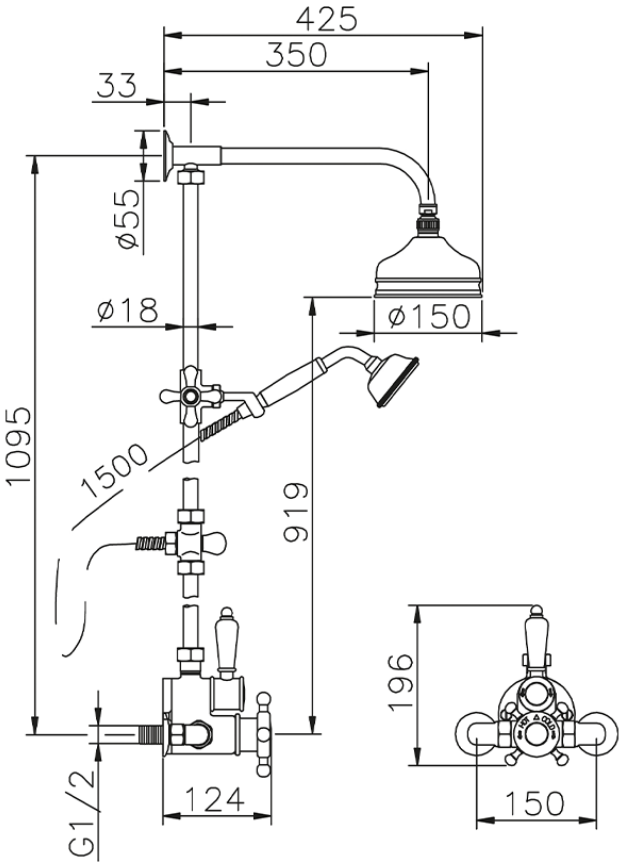

590.VT01H. https://en.huberitalia.com/2-function-thermostatic-shower-set-columns-590-vt01h

2026-06-27