Bath mixer EVA_EV000150

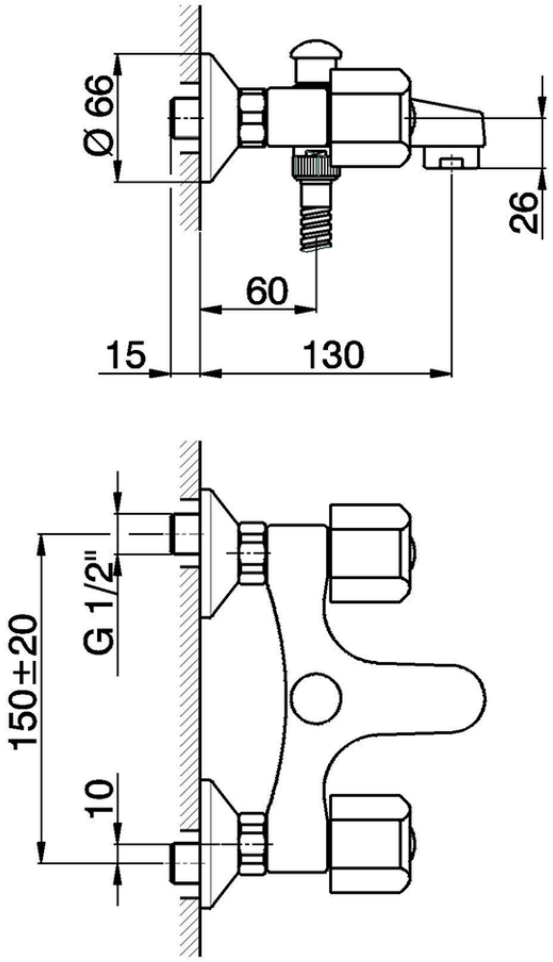

EV000150

https://en.huberitalia.com/bath-mixer-eva-ev000150

2026-01-10