Huber
TEL. (+39) 0322 967783
MAIL. huber@huberitalia.com

1-outlet Concealed thermostatic shower valve CONCEALED_ZB007281

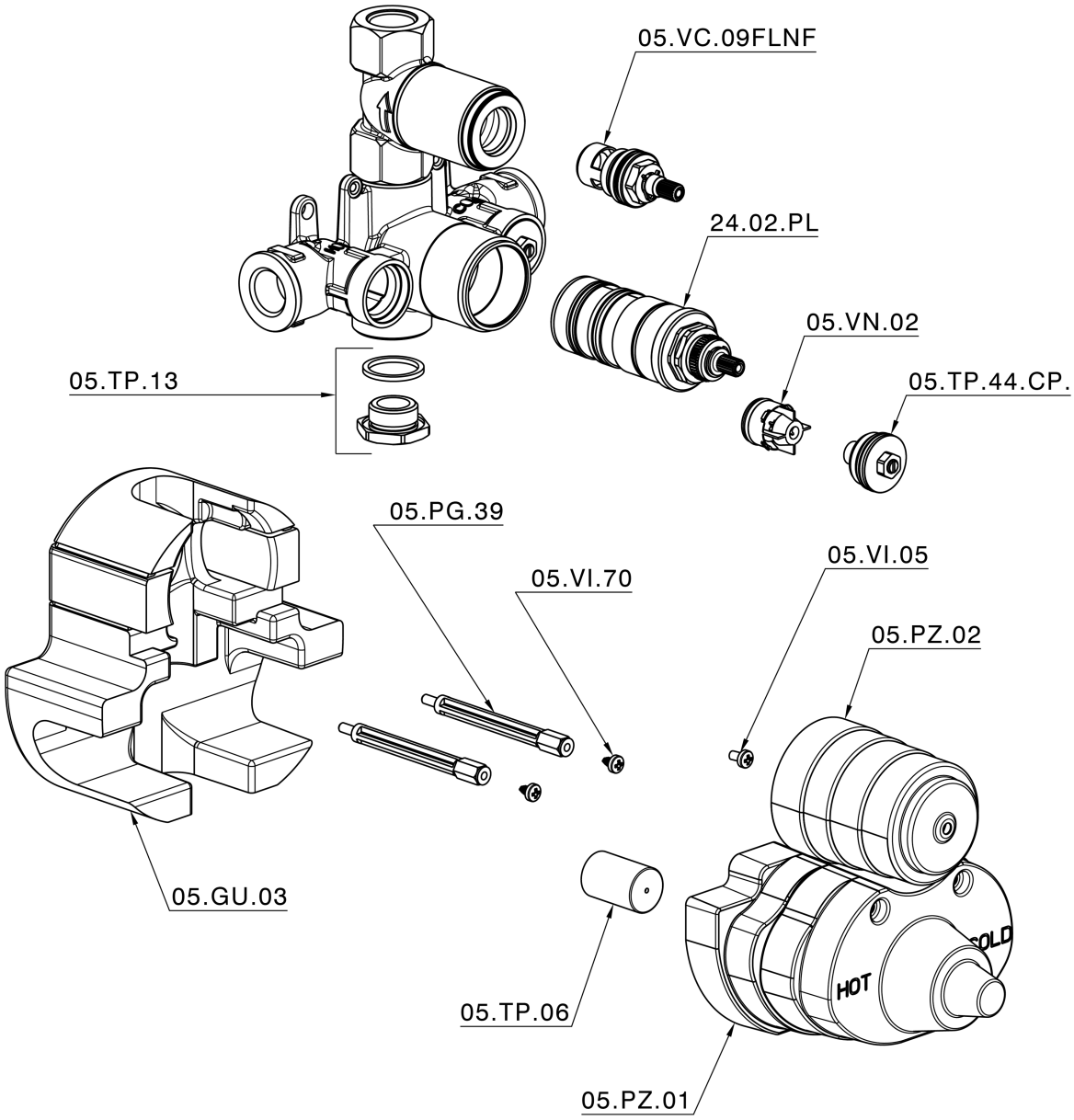

ZB007281 https://en.huberitalia.com/1-outlet-concealed-thermostatic-shower-valve-concealed-zb007281

2026-06-26

© 2021 Huber. Via Brughiere, 50. 28017 - San Maurizio (NO) - Italy
Mail: huber@hubertitalia.com, Telefono: (+39) 0322 967783, P.Iva IT02422800033.