Huber
TEL. (+39) 0322 967783
MAIL. huber@huberitalia.com

Thermostatic bidet mixer VICTORIAN_VTT56010

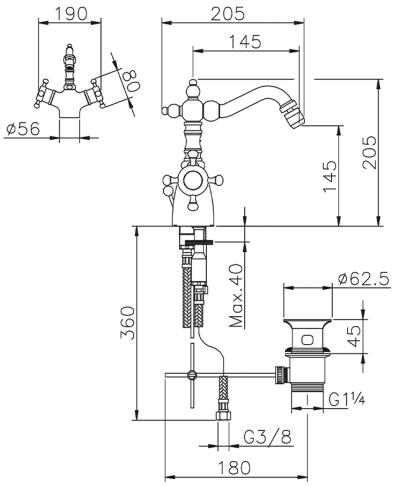

MODEL **VTT56010**

Thermostatic bidet mixer,with 1"1/4 automatic pop up waste,swivel Spout,G.3/8" Stainless Steel Flexible

AVAILABLE FINISHINGS

21 21 Chrome

27 27 Old Bronze

2A 2A Satin Brushed Nickel

2G 2G Antique Gold

2W 2W Brushed Gold

CHARACTERISTICS

Cartridge Spare Parts **24.04A.PP**

8x20 Plus P Thermostatic Valve

Thermostatic

The Huber thermostatic is your personal water manager, helping you to handle, control and save water and energy.

© 2021 Huber. Via Brughiere, 50. 28017 - San Maurizio (NO) - Italy
Mail: huber@hubertitalia.com, Telefono: (+39) 0322 967783, P.Iva IT02422800033.

Thermostatic bidet mixer VICTORIAN_VTT56010

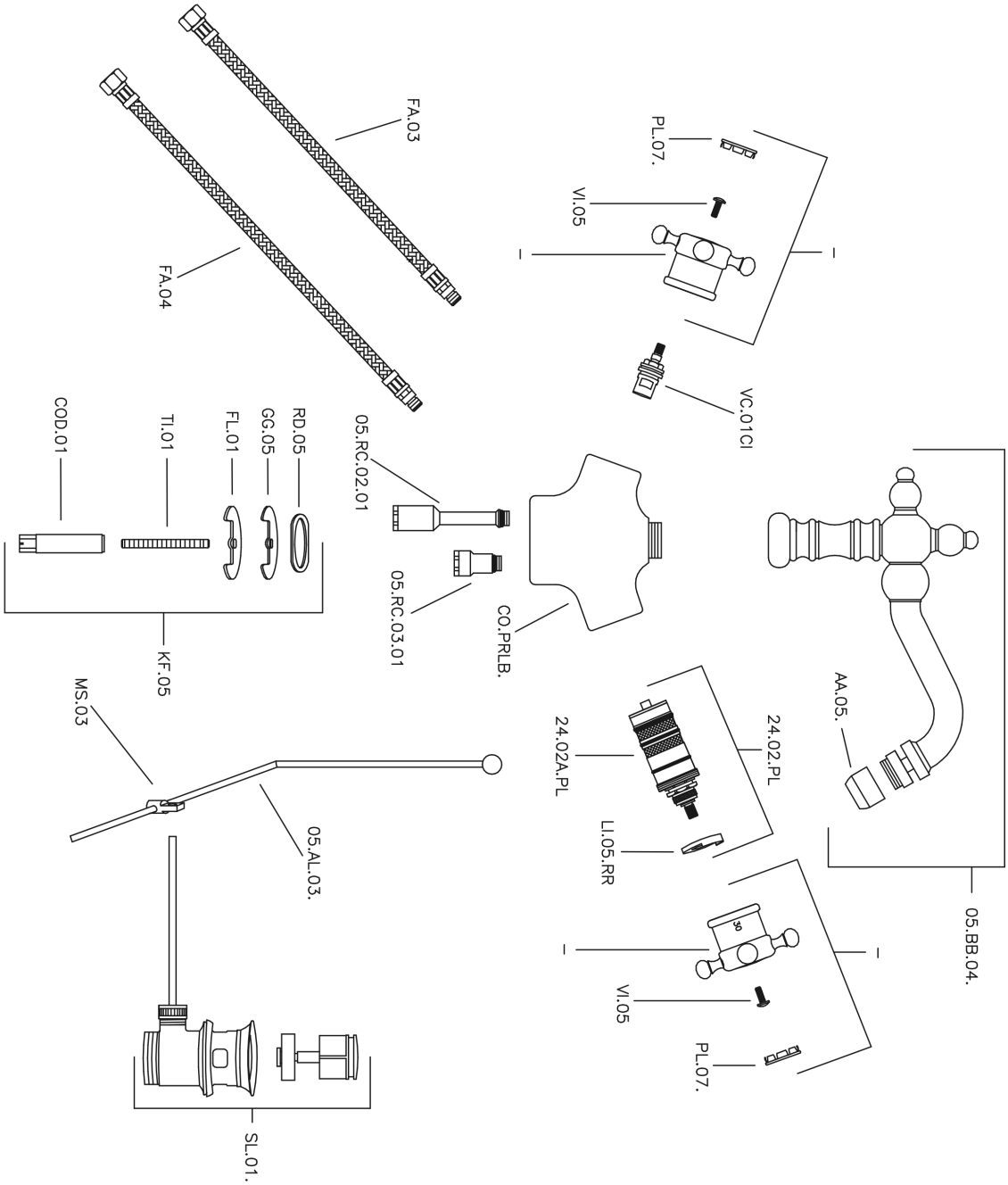

VTT56010

https://en.huberitalia.com/thermostatic-bidet-mixer-victorian-vtt56010

2026-06-13

© 2021 Huber. Via Brughiere, 50. 28017 - San Maurizio (NO) - Italy
Mail: huber@hubertitalia.com, Telefono: (+39) 0322 967783, P.Iva IT02422800033.