Huber
TEL. (+39) 0322 967783
MAIL. huber@huberitalia.com

Single lever 'large' washbasin mixer RICAMBI_H9000490

MODEL **H9000490**

Single lever 'large' washbasin mixer,with automatic 1"1/4 automatic pop-up waste,G.3/8" stainless steel flexible hoses

AVAILABLE FINISHINGS

21 21 Chrome

CHARACTERISTICS

Cartridge Spare Parts **ZZ95435000**

35 mm Cartridge

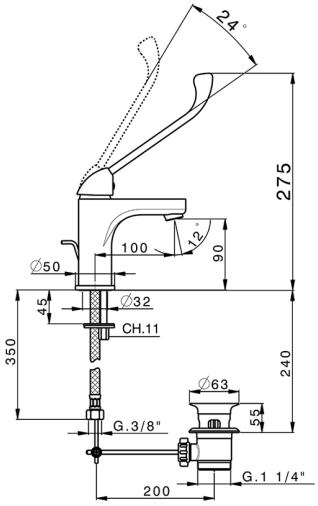

2026-06-06

© 2021 Huber. Via Brughiere, 50. 28017 - San Maurizio (NO) - Italy
Mail: huber@hubertitalia.com, Telefono: (+39) 0322 967783, P.Iva IT02422800033.