Concealed thermostatic bath set VICTORIAN_915.VT01H.

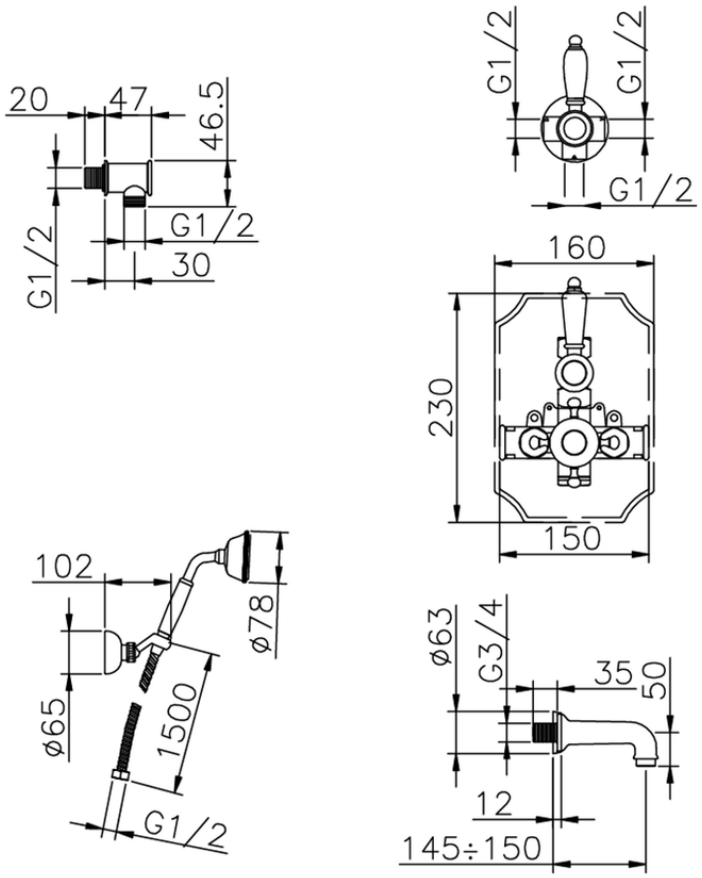

915.VT01H. https://en.huberitalia.com/concealed-thermostatic-bath-set-victorian-915-vt01h

2024-12-22