CombiShower with Diverter COLUMNS_SSQ82012

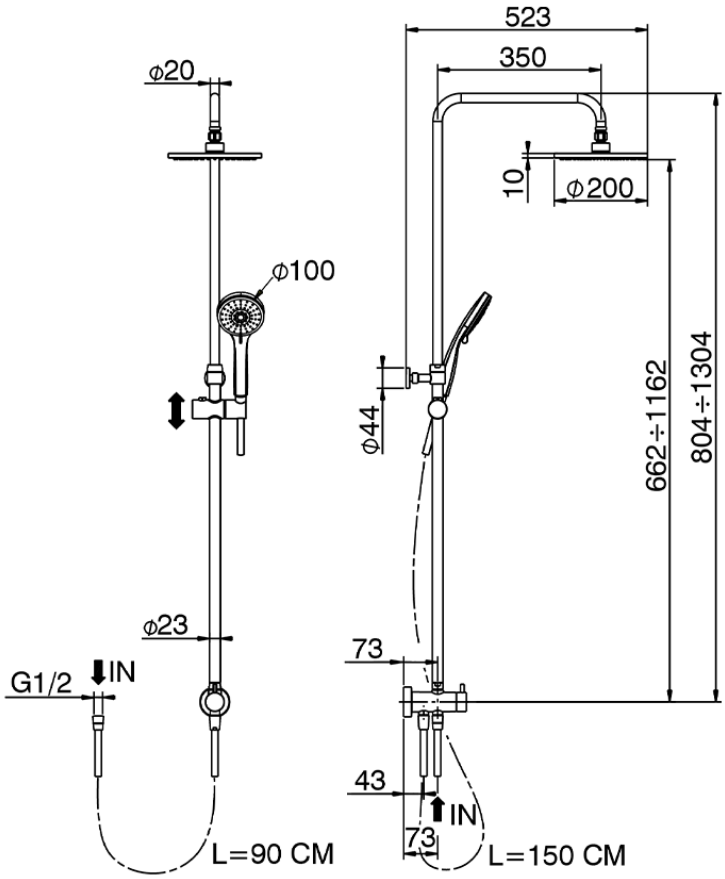

SSQ82012

https://en.huberitalia.com/combishower-with-diverter-columns-ssq82012

2026-04-25