Huber
TEL. (+39) 0322 967783
MAIL. huber@huberitalia.com

CombiShower with Diverter COLUMNS_SSQ82012

MODEL **SSQ82012**

CombiShower with Diverter,2-outlet diverter with external wall elbow,adjustable Column,sliding handshower bracket,100 mm ABS 3 sprays handshower,200 mm ABS round showerhead 11,5 mm thick,double 90-150 cm stainless steel hoses

AVAILABLE FINISHINGS

21 21 Chrome

CHARACTERISTICS

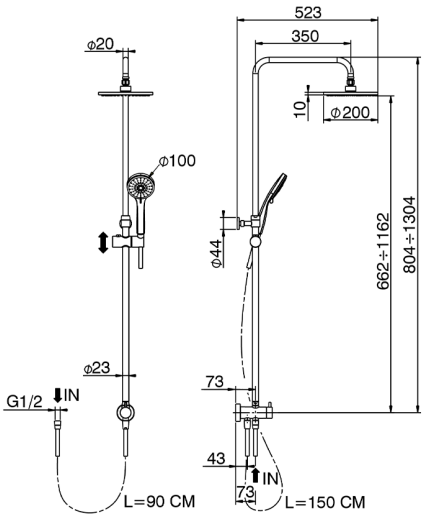

2026-04-25

© 2021 Huber. Via Brughiere, 50. 28017 - San Maurizio (NO) - Italy
Mail: huber@hubertitalia.com, Telefono: (+39) 0322 967783, P.Iva IT02422800033.